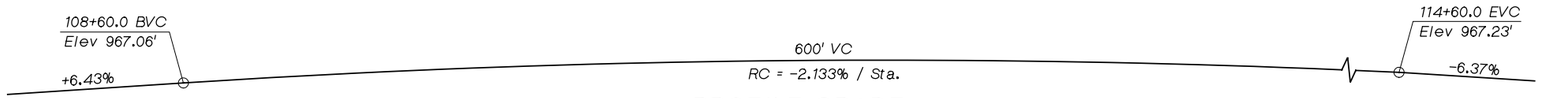

PROFILE GRADE

No Scale

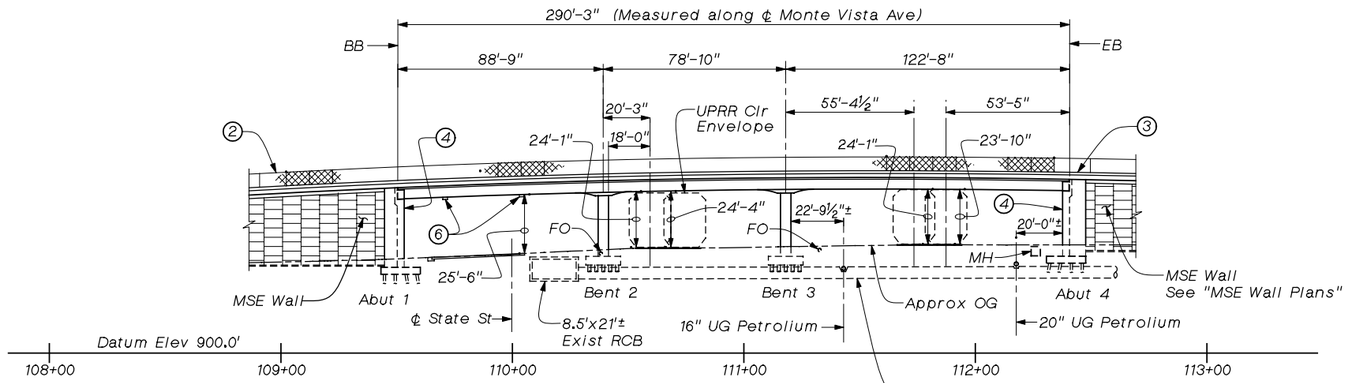

ELEVATION

1" = 30'

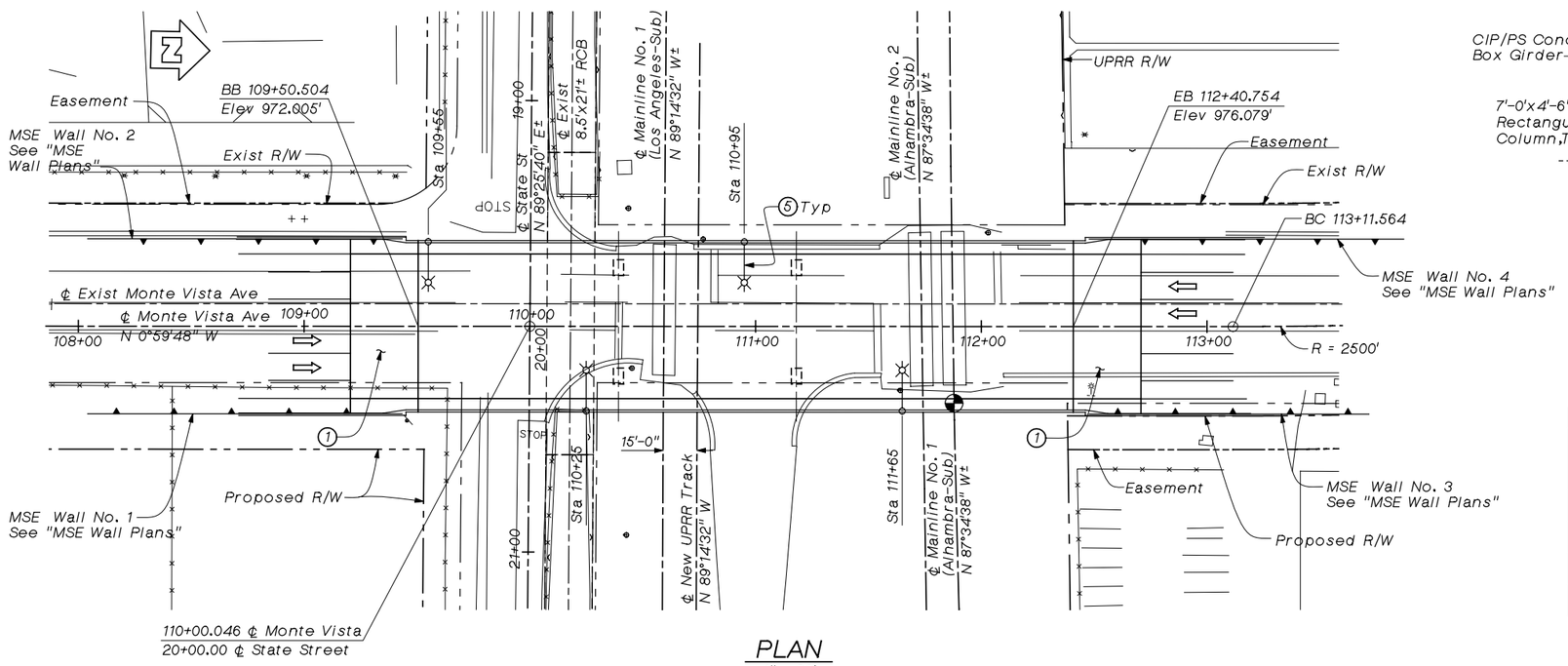

PLAN

1" = 30'

NOTES:

1. Structure Approach Type N(30S)
2. Chain Link Railing, Type 7 (mod)
3. Concrete Barrier Type 26
4. Architectural Treatment
5. Barrier Mounted Street Light, See "Lighting Plans"
6. Soffit Lighting, See "Lighting Plans"
7. Utility Openings in Sidewalk, Total 4

◕ Point of minimum vertical clearance

MVC Minimum Vertical Clearance

Note: For existing R/W, see "R/W Plans"

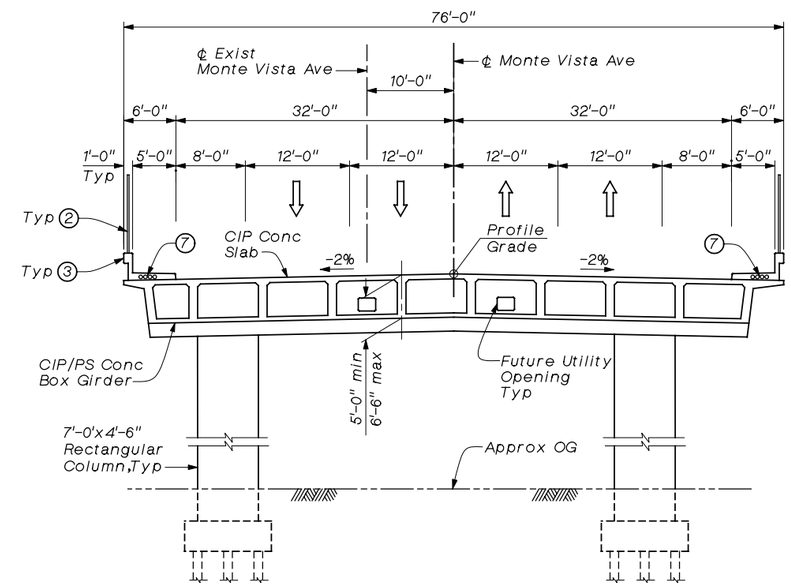

TYPICAL SECTION

⅛" = 1'-0"

Pile Data - HP 14X89 Steel Piles						
Location	Type	Design Loading (Service)	Nominal Resistance		Design Tip Elevation (ft)	Specified Tip Elevation (ft)
			Compression	Tension		
Abut 1	HP 14X89	100 Tons	200 Tons	0	+870 (1) +904 (3)	+870
Bent 2	HP 14X89	100 Tons	200 Tons	0	+867 (1) +908 (3)	+867
Bent 3	HP 14X89	100 Tons	200 Tons	0	+867 (1) +908 (3)	+867
Abut 4	HP 14X89	100 Tons	200 Tons	0	+876 (1) +910 (3)	+876

NOTES: Design Tip Elevation is controlled by the following demands: (1) Compression, (2) Tension, (3) Lateral loads

100% SUBMITTAL
NOT FOR CONSTRUCTION
March 16, 2006

For Index to Plans, Index to Standard Plans and General Notes, see, "General Notes" sheet

Note:
The Contractor shall verify all controlling field dimensions before ordering or fabricating any material.

Underground Service Alert
Call: TOLL FREE 1-800 422-4133
TWO WORKING DAYS BEFORE YOU DIG

REGISTERED PROFESSIONAL ENGINEER M. CHAR C-057894 EXP. 6-30-06 CIVIL STATE OF CALIFORNIA

LAN
LIM & NASCIMENTO ENG. CORP.
1887 BUSINESS CENTER DR. SUITE 6
SAN BERNARDINO, CA 92408

M. Char 3-15-06
M. CHAR R.C.E. 057894 DATE
MY LICENSE EXPIRES 6-30-06

LAN ENG JOB NO. COFM0202

MARK	REVISIONS	BY	APPR.	DATE

APPROVED _____ 2006
MICHAEL HUDSON, CITY OF MONT CLAIR REDEVELOPMENT/PUBLIC WORKS DEPARTMENT
REGISTERED CIVIL ENGINEER NO. _____
MY LICENSE EXPIRES _____

DRAWN BY: R. ANDRASEK
CHECKED BY: U. SANDIRASEGARAM
RECOMMENDED BY: M. CHAR

CITY OF MONTCLAIR
REDEVELOPMENT/PUBLIC WORKS DEPARTMENT
MONTE VISTA AVENUE GRADE SEPARATION
GENERAL PLAN

CITY FILE NO --------
DRAWING NO 1 OF 21
SHEET 42 OF 82 SHEETS

GENERAL NOTES
LOAD FACTOR DESIGN

DESIGN:	CALTRANS BRIDGE DESIGN SPECIFICATIONS-APR 11, 2000 (LFD) (1996 AASHTO with Interims and Revisions by CALTRANS)
DEAD LOAD:	Includes 35 psf for future wearing surface
LIVE LOAD:	HS20-44, alternative and permit design load. Pedestrian Load = 85 psf
SEISMIC DESIGN	CALTRANS Seismic Design Criteria (SDC) Version 1.3 Febuary, 2004.
SEISMIC LOADING	SDC Fig. B.7 (mod)* Soil Type D, Magnitude 6.50 ± 0.25 Peak Rock Acceleration = 0.5g * - Increase spectral accelerations by 20% for all periods
REINFORCED CONCRETE:	f'c = 4,000 psi Deck Slab Design: fc = 1,200 psi, fs = 20,000 psi ASTM A706, fy = 60,000 psi, n=8
PRESTRESSED CONCRETE:	See "Girder Layout" sheet.

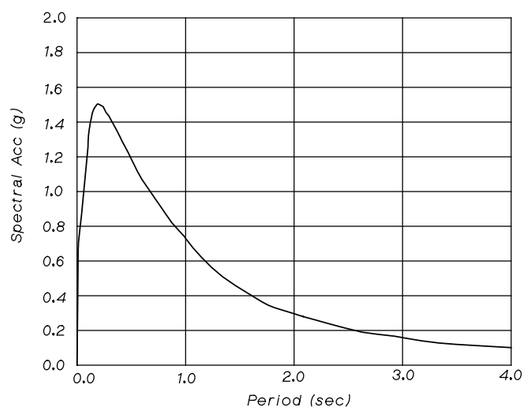

SDC FIGURE B.7 (Modified)

INDEX TO PLANS

1. GENERAL PLAN
2. GENERAL NOTES
3. DECK CONTOURS
4. FOUNDATION PLAN
5. ABUTMENT 1 LAYOUT
6. ABUTMENT 4 LAYOUT
7. ABUTMENT PILE LAYOUT
8. ABUTMENT DETAILS NO. 1
9. ABUTMENT DETAILS NO. 2
10. BENT LAYOUT
11. BENT DETAILS NO. 1
12. BENT DETAILS NO. 2
13. TYPICAL SECTION NO. 1
14. TYPICAL SECTION NO. 2
15. GIRDER LAYOUT
16. CONCRETE BARRIER TYPE 26 (MODIFIED)
17. STRUCTURE APPROACH TYPE N(30S)
18. STRUCTURE APPROACH DRAINAGE DETAILS
19. CHAIN LINK RAILING TYPE 7 (MODIFIED)
20. LOG OF TEST BORINGS B-1, B-2
21. LOG OF TEST BORINGS B-3, B-4

QUANTITIES

STRUCTURE EXCAVATION (BRIDGE)	1015	CY
STRUCTURE BACKFILL (BRIDGE)	1758	CY
FURNISH STEEL PILING (CLASS 100) HP 14x89	9438	FT
DRIVE STEEL PILE (CLASS 100) HP 14x89	140	EA
PRESTRESSING CAST-IN-PLACE CONCRETE	1	LUMPSUM
STRUCTURAL CONCRETE (BRIDGE FOOTING)	478	CY
STRUCTURAL CONCRETE (BRIDGE)	2230	CY
STRUCTURAL CONCRETE, APPROACH SLAB TYPE N(30S)	175	CY
ARCHITECTURAL TREATMENT	4926	SF
JOINT SEAL TYPE B (MR=2")	152	FT
BAR REINFORCING STEEL (BRIDGE)	540,436	LB
CHAIN LINK RAILING TYPE 7 (MOD)	609	FT
CONCRETE BARRIER TYPE 26	609	FT
WELDED STEEL TUBE CASING (BRIDGE)	156	LF

Note:
For MSE Wall quantities, see "MSE Wall Plans"

STANDARD PLANS FOR CONSTRUCTION OF LOCAL STREETS & ROADS, DATED JULY 2002

A10A	ABBREVIATIONS AND ACRONYMS
A10B	SYMBOLS
A62C	LIMITS OF PAYMENT FOR EXCAVATION AND BACKFILL - BRIDGE
B0-1	BRIDGE DETAILS
B0-3	BRIDGE DETAILS
B0-5	BRIDGE DETAILS
B0-13	BRIDGE DETAILS
B2-8	PILE DETAILS - CLASS 100
B6-21	JOINT SEAL (MAX MOVEMENT RATING = 2")
B7-1	BOX GIRDER DETAILS
B7-10	UTILITY OPENING-BOX GIRDER
B8-5	CAST-IN-PLACE PRESTRESSED GIRDER DETAILS
B11-54	CONCRETE BARRIER TYPE 26

Standard Plan Sheet No.

Detail No.

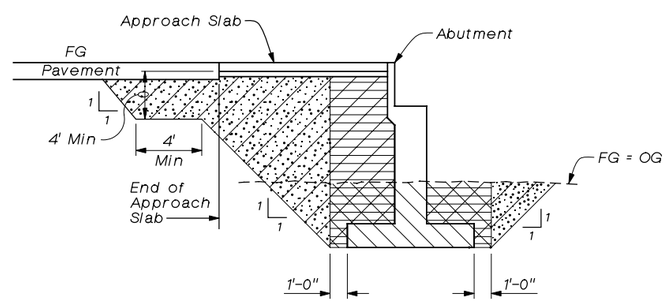

LEGEND

- Structure Excavation (Bridge)
- Structure Backfill (Bridge)
- Roadway Embankment (See "Road Plans")
- Low Expansion Material
  EI<50
  SE>20, Expansive Index to be determined by ASTM D4829.

TYPICAL SECTION - EXPANSIVE SOIL EXCLUSION ZONE & EXCAVATION AND BACKFILL PAYLIMITS IN BRIDGE EMBANKMENT

No Scale

100% SUBMITTAL
NOT FOR CONSTRUCTION
March 16, 2006

Note:
The Contractor shall verify all controlling field dimensions before ordering or fabricating any material.

Underground Service Alert
Call: TOLL FREE
1-800
422-4133
TWO WORKING DAYS BEFORE YOU DIG

PROFESSIONAL ENGINEER M. CHAR C-057894 EXP. 6-30-06 CIVIL STATE OF CALIFORNIA

LAN
LIM & NASCIMENTO ENG. CORP.
1887 BUSINESS CENTER DR. SUITE 6
SAN BERNARDINO, CA 92408

M. CHAR R.C.E. 057894
MY LICENSE EXPIRES 6-30-06

3-15-06
DATE

LAN ENG JOB NO. COFM0202

MARK	REVISIONS	BY	APPR.	DATE

APPROVED _____ 2006
MICHAEL HUDSON, CITY OF MONT CLAIR
REDEVELOPMENT/PUBLIC WORKS DEPARTMENT
REGISTERED CIVIL ENGINEER NO. _____
MY LICENSE EXPIRES _____

DRAWN BY: R. ANDRASEK
CHECKED BY: U. SANDIRASEGARAM
RECOMMENDED BY: M. CHAR

CITY OF MONTCLAIR
REDEVELOPMENT/PUBLIC WORKS DEPARTMENT
MONTE VISTA AVENUE
GRADE SEPARATION
GENERAL NOTES

CITY FILE NO

DRAWING NO
2 OF 21
SHEET 43 OF 82 SHEETS

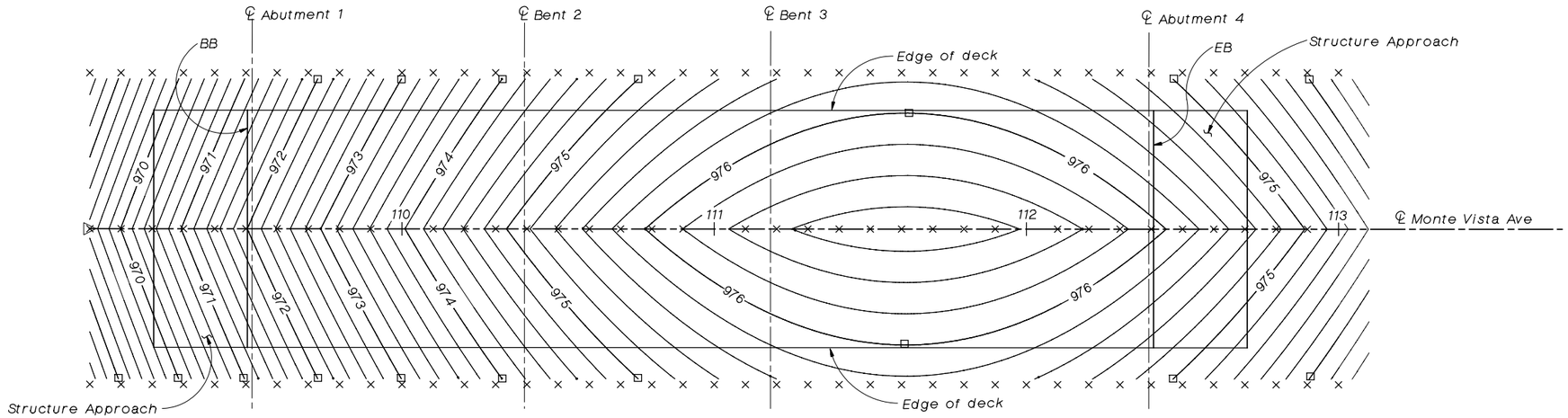

DECK CONTOURS

1"=20'

Notes:

× 10' interval along ℄ Monte Vista Ave

☐ Indicates even foot contour

Contour interval is 0.20'

Contours do not include allowance for camber.

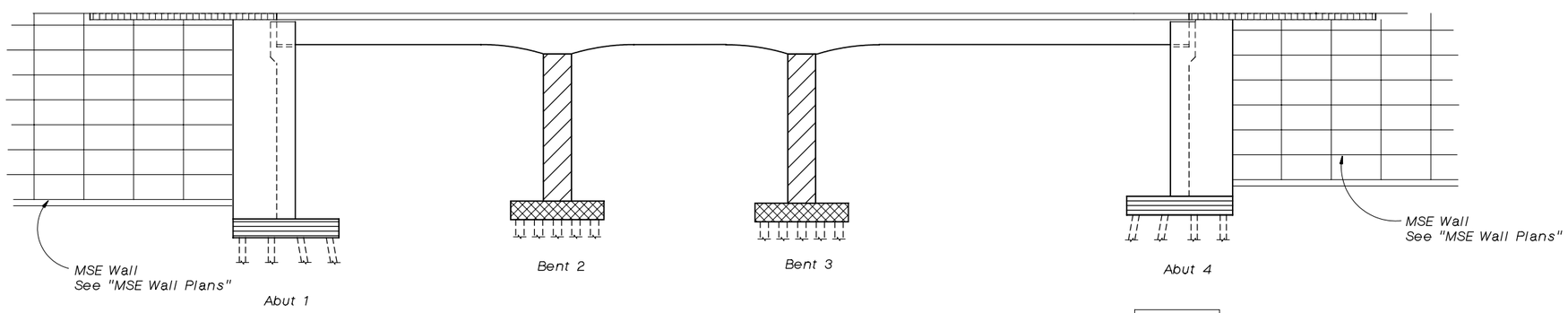

CONCRETE STRENGTH AND TYPE LIMITS

No scale

- Structural Concrete, Bridge (4,500 psi @ 28 days)
- Structural Concrete, Bridge (4,000 psi @ 28 days)
- Structural Concrete, Bridge Footing (4,000 psi @ 28 days)
- Structural Concrete, Bridge Footing (4,500 psi @ 28 days)
- Structural Concrete, Approach Slab (3,600 psi @ 28 days)

100% SUBMITTAL
NOT FOR CONSTRUCTION
March 16, 2006

Note:
The Contractor shall verify all controlling field dimensions before ordering or fabricating any material.

Underground Service Alert
Call: TOLL FREE 1-800 422-4133
TWO WORKING DAYS BEFORE YOU DIG

REGISTERED PROFESSIONAL ENGINEER M. CHAR C-057894 EXP. 6-30-06 CIVIL STATE OF CALIFORNIA

LAN
LIM & NASCIMENTO ENG. CORP.
1887 BUSINESS CENTER DR. SUITE 6
SAN BERNARDINO, CA 92408

M. CHAR R.C.E. 057894
MY LICENSE EXPIRES 6-30-06

3-15-06
DATE

LAN ENG JOB NO. COFM0202

MARK	REVISIONS	BY	APPR.	DATE

APPROVED _____ 2006
MICHAEL HUDSON, CITY OF MONT CLAIR
REDEVELOPMENT/PUBLIC WORKS DEPARTMENT
REGISTERED CIVIL ENGINEER NO. _____
MY LICENSE EXPIRES _____

DRAWN BY: R. ANDRASEK
CHECKED BY: U. SANDIRASEGARAM
RECOMMENDED BY: M. CHAR

CITY OF MONTCLAIR
REDEVELOPMENT/PUBLIC WORKS DEPARTMENT

MONTE VISTA AVENUE
GRADE SEPARATION

DECK CONTOURS

CITY FILE NO

DRAWING NO
3 OF 21

SHEET 44 OF 82 SHEETS

Benchmark

State St. & Central Ave Elev 957.72
Brass disc. stamped No. 701.12 1969
in curb on South side State St.
under Central Ave. overcrossing
about 4.8' East of a door near the
center of the overcrossing.

UTILITIES

1. Fiber Optic (MCI) (relocate)
2. 16"± UG Petrolium (Kinder Morgan)
3. 20"± UG Petrolium (Kinder Morgan)
4. 10"± Sewer (relocate)
5. 12"± Water (relocate)
6. 8"± Irrigation (Abandoned)
7. 2"± Gas (Abandoned)
8. 15"± Sewer
9. Cable TV
10. 2"± Water (Abandoned)
11. 24"± Water
12. 4"± Gas
13. 2"± Gas (Abandoned)
14. Fiber Optic (William's Comm., Level 3)
15. New Manhole
16. 12"± Water (Abandoned)
17. RR Signal Arm (relocate)

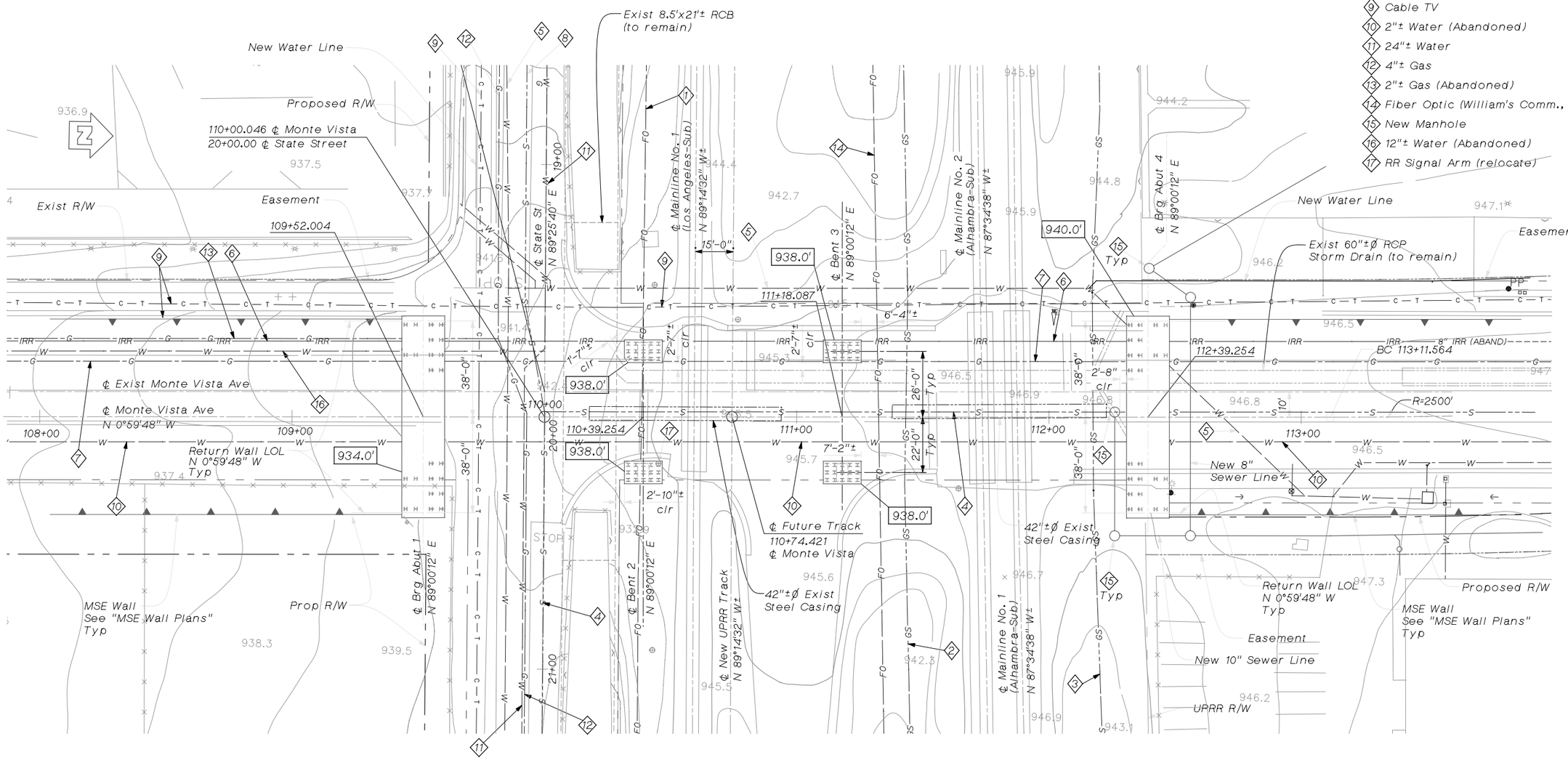

PLAN
1" = 20'

LEGEND

- Indicates Bottom of Footing elevation
- Indicates Existing
- Indicates New Footing

Note:
For information on new utilities, see "Proposed Water Improvement Plans" and "Sewer Plans"

100% SUBMITTAL
NOT FOR CONSTRUCTION
March 16, 2006

Note:
The Contractor shall verify all controlling field dimensions before ordering or fabricating any material.

Underground Service Alert
Call: TOLL FREE
1-800
422-4133
TWO WORKING DAYS BEFORE YOU DIG

REGISTERED PROFESSIONAL ENGINEER
M. CHAR
C-057894
EXP. 6-30-06
CIVIL
STATE OF CALIFORNIA

LAN
LIM & NASCIMENTO ENG. CORP.
1887 BUSINESS CENTER DR. SUITE 6
SAN BERNARDINO, CA 92408

M. CHAR R.C.E. 057894
MY LICENSE EXPIRES 6-30-06
3-15-06
DATE

LAN ENG JOB NO. COFM0202

MARK	REVISIONS	BY	APPR.	DATE

APPROVED _____ 2006
MICHAEL HUDSON, CITY OF MONT CLAIR
REDEVELOPMENT/PUBLIC WORKS DEPARTMENT
REGISTERED CIVIL ENGINEER NO. _____
MY LICENSE EXPIRES _____
DRAWN BY: R. ANDRASEK
CHECKED BY: U. SANDIRASEGARAM
RECOMMENDED BY: M. CHAR

CITY OF MONTCLAIR
REDEVELOPMENT/PUBLIC WORKS DEPARTMENT
MONTE VISTA AVENUE
GRADE SEPARATION
FOUNDATION PLAN

CITY FILE NO

DRAWING NO
4 OF 21
SHEET 45 OF 82 SHEETS

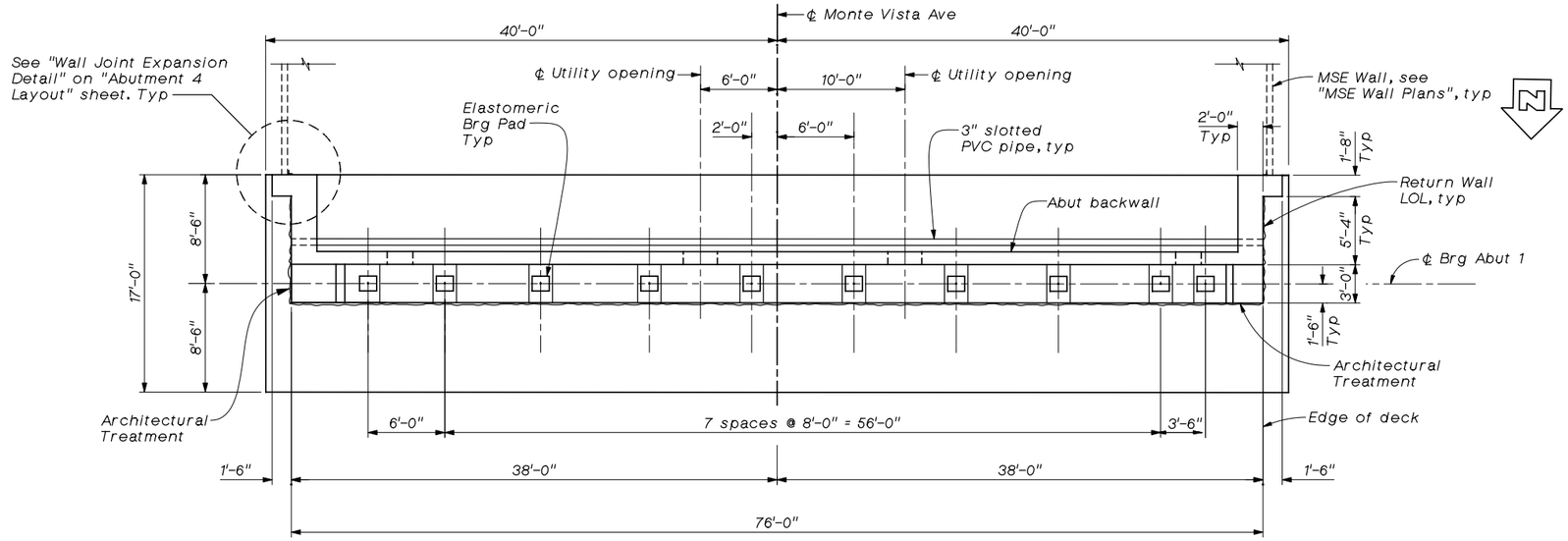

ABUTMENT 1 LAYOUT

3/16" = 1'-0"

Note:
For steel tubing behind Abutment wall, see "Abutment Details No. 2" sheet.

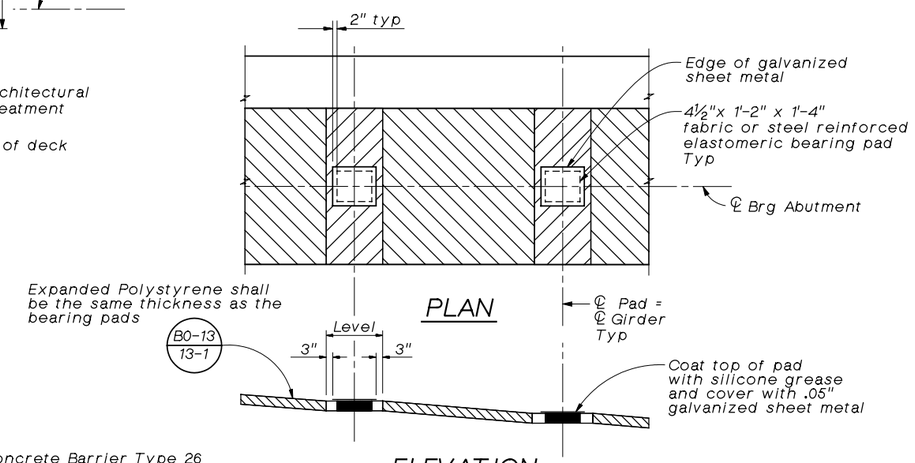

ELEVATION

BEARING PAD DETAIL

No scale

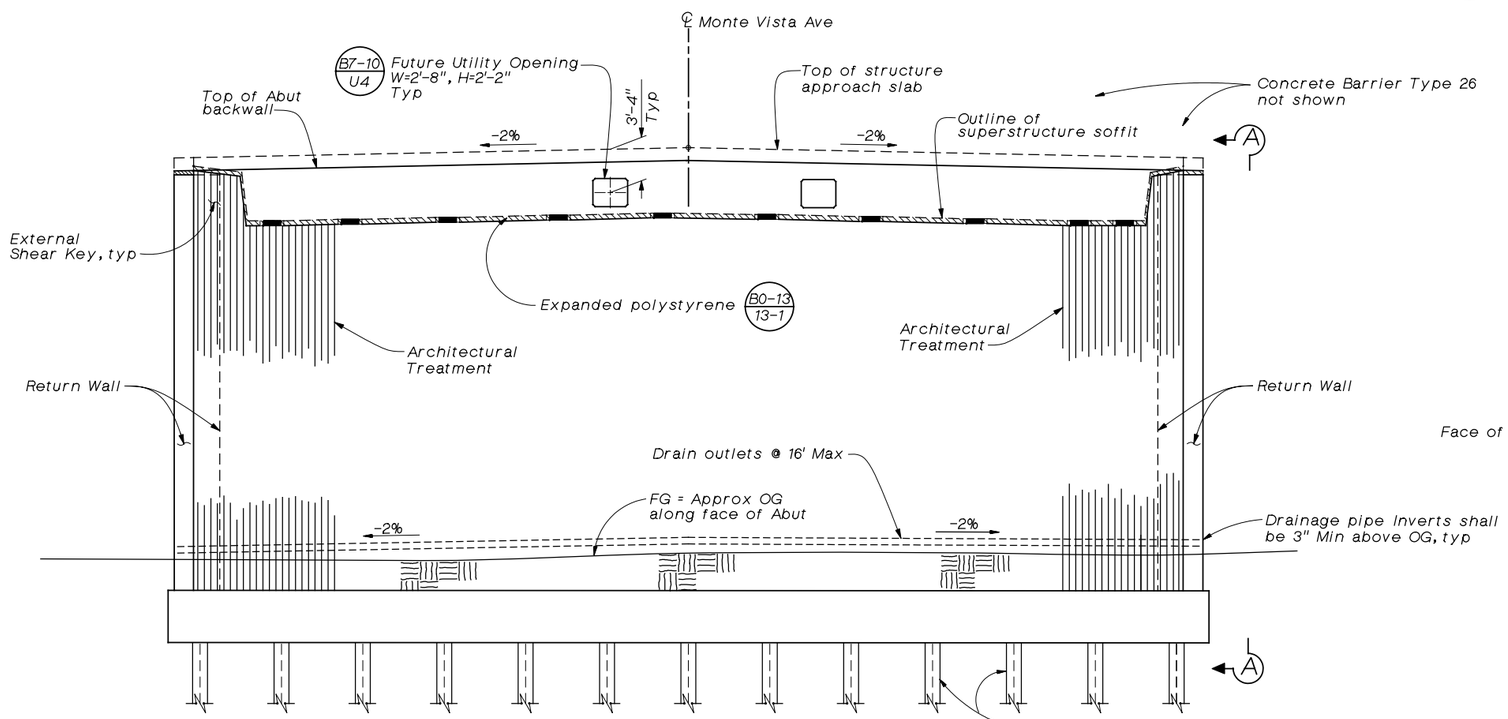

ABUTMENT 1 ELEVATION

3/16" = 1'-0"

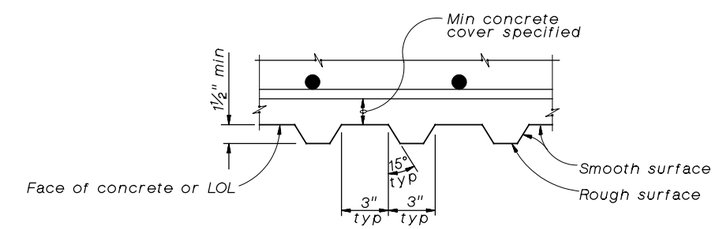

ARCHITECTURAL TREATMENT DETAIL

No Scale

Note: Groove shall be vertical.

Notes:

1. For "View A-A" and "Shear Key Details", see "Abutment Details No. 2" sheet.
2. For footing & pile layout, see "Abutment Pile Layout" sheet.

100% SUBMITTAL
NOT FOR CONSTRUCTION
March 16, 2006

Note:
The Contractor shall verify all controlling field dimensions before ordering or fabricating any material.

Underground Service Alert
Call: TOLL FREE 1-800 422-4133
TWO WORKING DATE BEFORE YOU DIG

REGISTERED PROFESSIONAL ENGINEER M. CHAR C-057894 EXP. 6-30-06 CIVIL STATE OF CALIFORNIA

LAN
LIM & NASCIMENTO ENG. CORP.
1887 BUSINESS CENTER DR. SUITE 6
SAN BERNARDINO, CA 92408

M. CHAR R.C.E. 057894
MY LICENSE EXPIRES 6-30-06
3-15-06
DATE

LAN ENG JOB NO. COFM0202

MARK	REVISIONS	BY	APPR.	DATE

APPROVED _____ 2006
MICHAEL HUDSON, CITY OF MONT CLAIR REDEVELOPMENT/PUBLIC WORKS DEPARTMENT
REGISTERED CIVIL ENGINEER NO. _____
MY LICENSE EXPIRES _____
DRAWN BY: R. ANDRASEK
CHECKED BY: U. SANDIRASEGARAM
RECOMMENDED BY: M. CHAR

CITY OF MONTCLAIR
REDEVELOPMENT/PUBLIC WORKS DEPARTMENT
MONTE VISTA AVENUE GRADE SEPARATION
ABUTMENT 1 LAYOUT

CITY FILE NO --------
DRAWING NO 5 OF 21
SHEET 46 OF 82 SHEETS

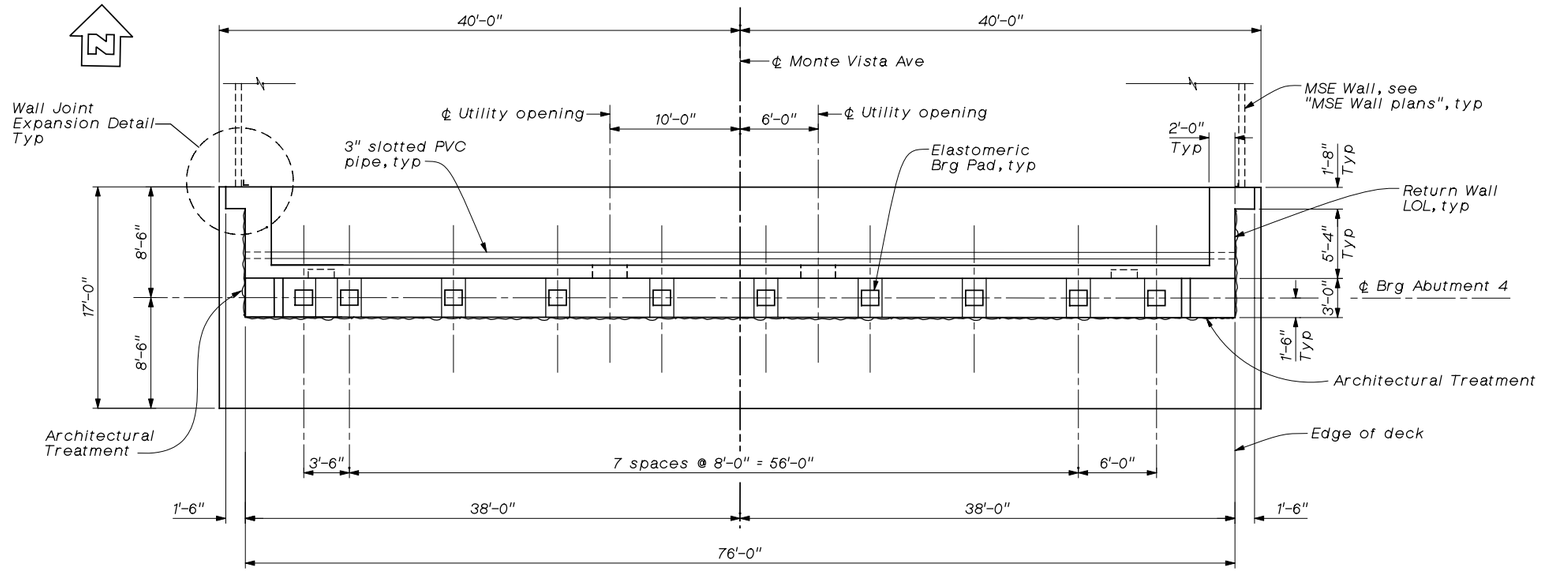

ABUTMENT 4 LAYOUT

9/16" = 1'-0"

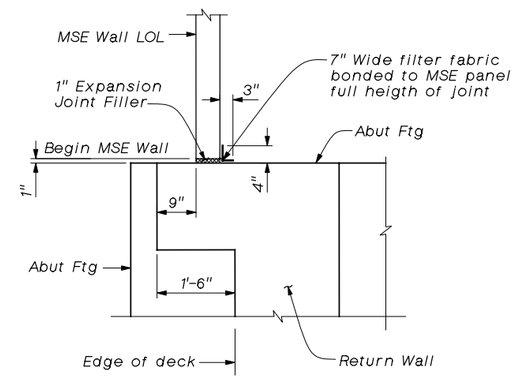

WALL JOINT EXPANSION DETAIL

3/4" = 1'-0"

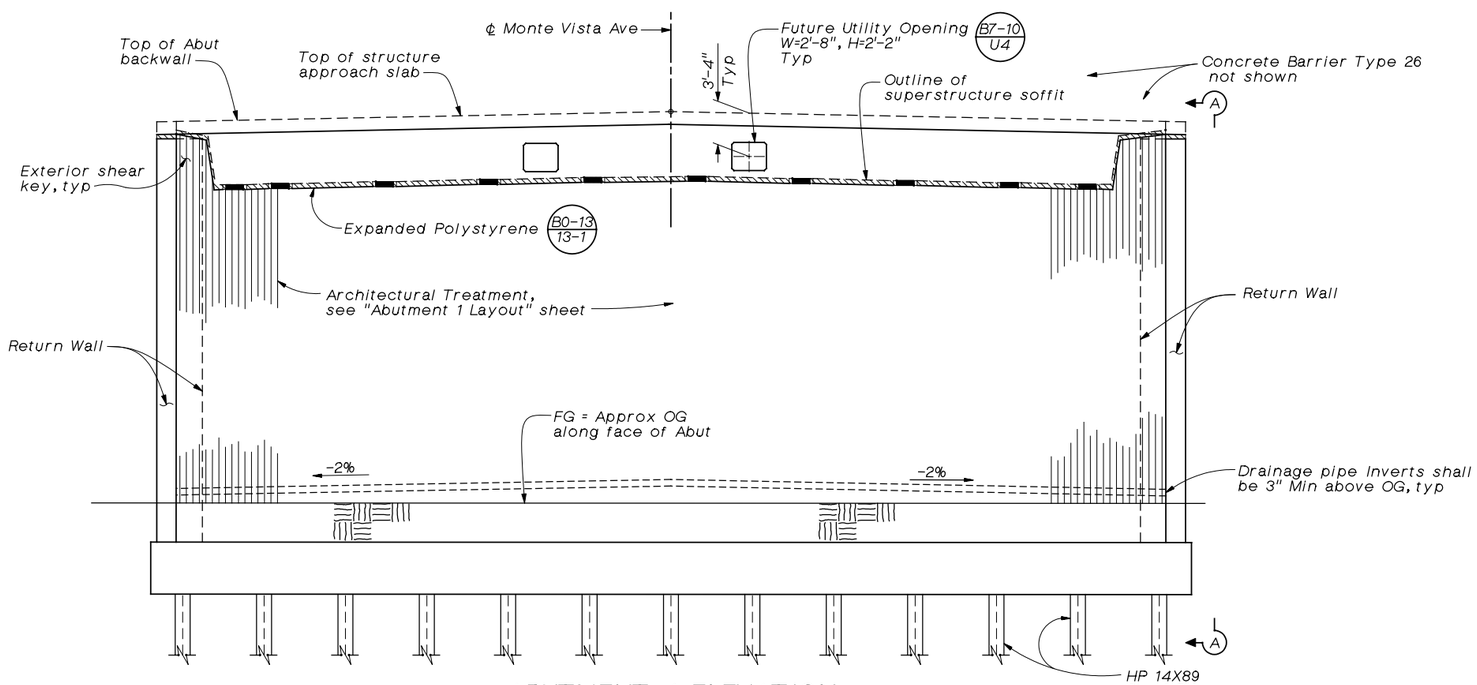

ABUTMENT 4 ELEVATION

3/16" = 1'-0"

Notes:

1. For "View A-A",and "Shear Key Details", see "Abutment Details No. 2" sheet.
2. For footing and pile layout, see "Abutment Pile Layout" sheet.
3. For Bearing Pad detail, see "Abutment 1 Layout" sheet.

100% SUBMITTAL
NOT FOR CONSTRUCTION
March 16, 2006

Note:
The Contractor shall verify all controlling field dimensions before ordering or fabricating any material.

Underground Service Alert
Call: TOLL FREE 1-800 422-4133
TWO WORKING DAYS BEFORE YOU DIG

REGISTERED PROFESSIONAL ENGINEER M. CHAR C-057894 EXP. 6-30-06 CIVIL STATE OF CALIFORNIA

LAN
LIM & NASCIMENTO ENG. CORP.
1887 BUSINESS CENTER DR. SUITE 6
SAN BERNARDINO, CA 92408

M. CHAR R.C.E. 057894
MY LICENSE EXPIRES 6-30-06

3-15-06
DATE

LAN ENG JOB NO. COFM0202

MARK	REVISIONS	BY	APPR.	DATE

APPROVED _____ 2006
MICHAEL HUDSON, CITY OF MONT CLAIR REDEVELOPMENT/PUBLIC WORKS DEPARTMENT
REGISTERED CIVIL ENGINEER NO. _____
MY LICENSE EXPIRES _____

DRAWN BY: R. ANDRASEK
CHECKED BY: U. SANDIRASEGARAM
RECOMMENDED BY: M. CHAR

CITY OF MONTCLAIR
REDEVELOPMENT/PUBLIC WORKS DEPARTMENT
MONTE VISTA AVENUE
GRADE SEPARATION
ABUTMENT 4 LAYOUT

CITY FILE NO ---
DRAWING NO 6 OF 21
SHEET 47 OF 82 SHEETS

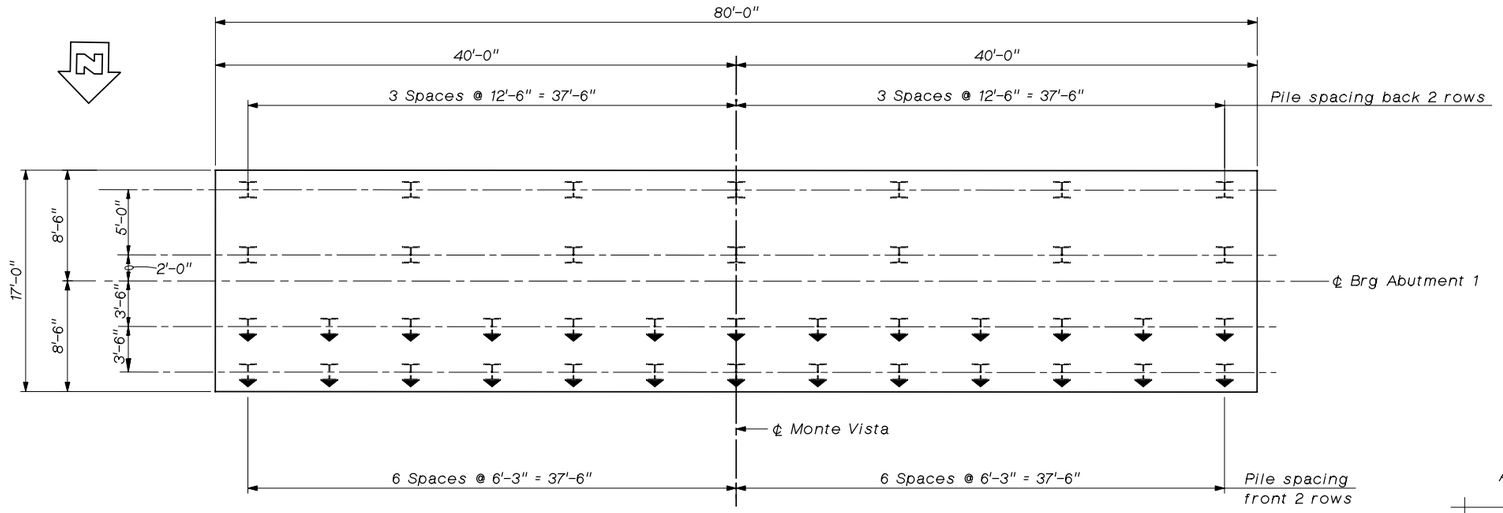

ABUTMENT 1 PILE LAYOUT

3/16" = 1'-0"

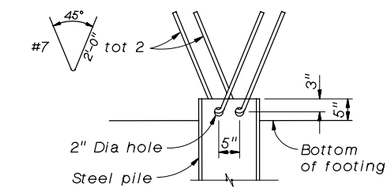

STEEL PILE ANCHOR

No scale

LEGEND:

- Indicates HP14x89 battered (1:3) steel pile
- Indicates HP14x89 vertical steel pile

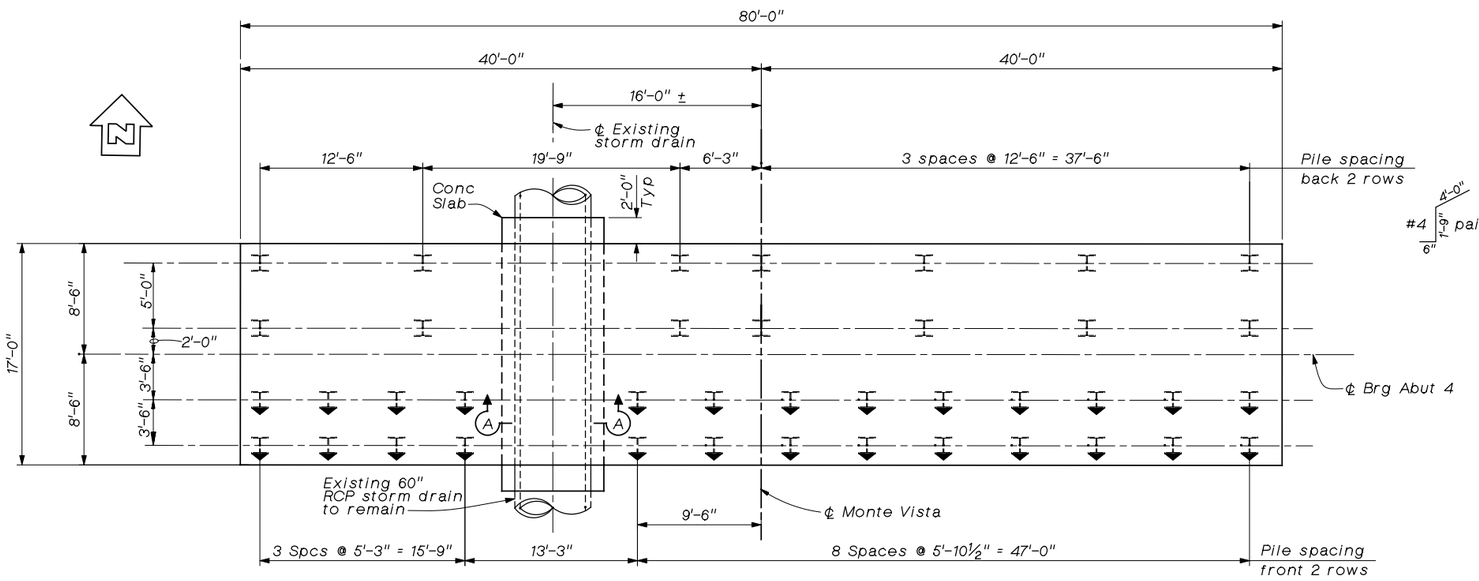

ABUTMENT 4 PILE LAYOUT

3/16" = 1'-0"

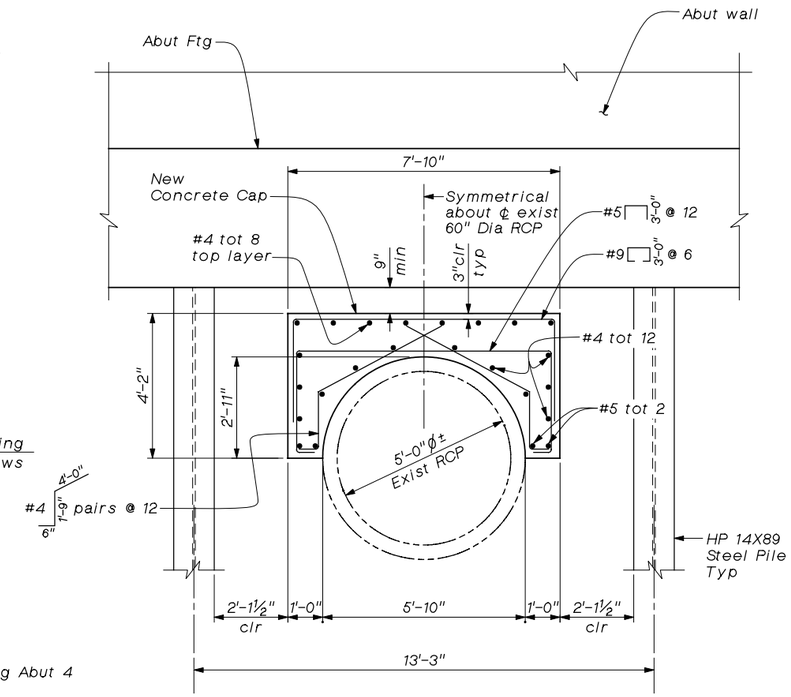

SECTION A-A

½" = 1'-0"

Note:

1. For pile data table, see "General Plan" sheet.

100% SUBMITTAL
NOT FOR CONSTRUCTION
March 16, 2006

Note:
The Contractor shall verify all controlling field dimensions before ordering or fabricating any material.

Underground Service Alert
Call: TOLL FREE 1-800 422-4133
TWO WORKING DAYS BEFORE YOU DIG

REGISTERED PROFESSIONAL ENGINEER M. CHAR C-057894 EXP. 6-30-06 CIVIL STATE OF CALIFORNIA

LAN
LIM & NASCIMENTO ENG. CORP.
1887 BUSINESS CENTER DR. SUITE 6
SAN BERNARDINO, CA 92408

M. Char 3-15-06
M. CHAR R.C.E. 057894 MY LICENSE EXPIRES 6-30-06 — DATE

LAN ENG JOB NO. COFM0202

MARK	REVISIONS	BY	APPR.	DATE

APPROVED _____ 2006
MICHAEL HUDSON, CITY OF MONT CLAIR REDEVELOPMENT/PUBLIC WORKS DEPARTMENT
REGISTERED CIVIL ENGINEER NO. _____
MY LICENSE EXPIRES _____
DRAWN BY: R. ANDRASEK
CHECKED BY: U. SANDIRASEGARAM
RECOMMENDED BY: M. CHAR

CITY OF MONTCLAIR
REDEVELOPMENT/PUBLIC WORKS DEPARTMENT
MONTE VISTA AVENUE GRADE SEPARATION
ABUTMENT PILE LAYOUT

CITY FILE NO ---
DRAWING NO 7 OF 21
SHEET 48 OF 82 SHEETS

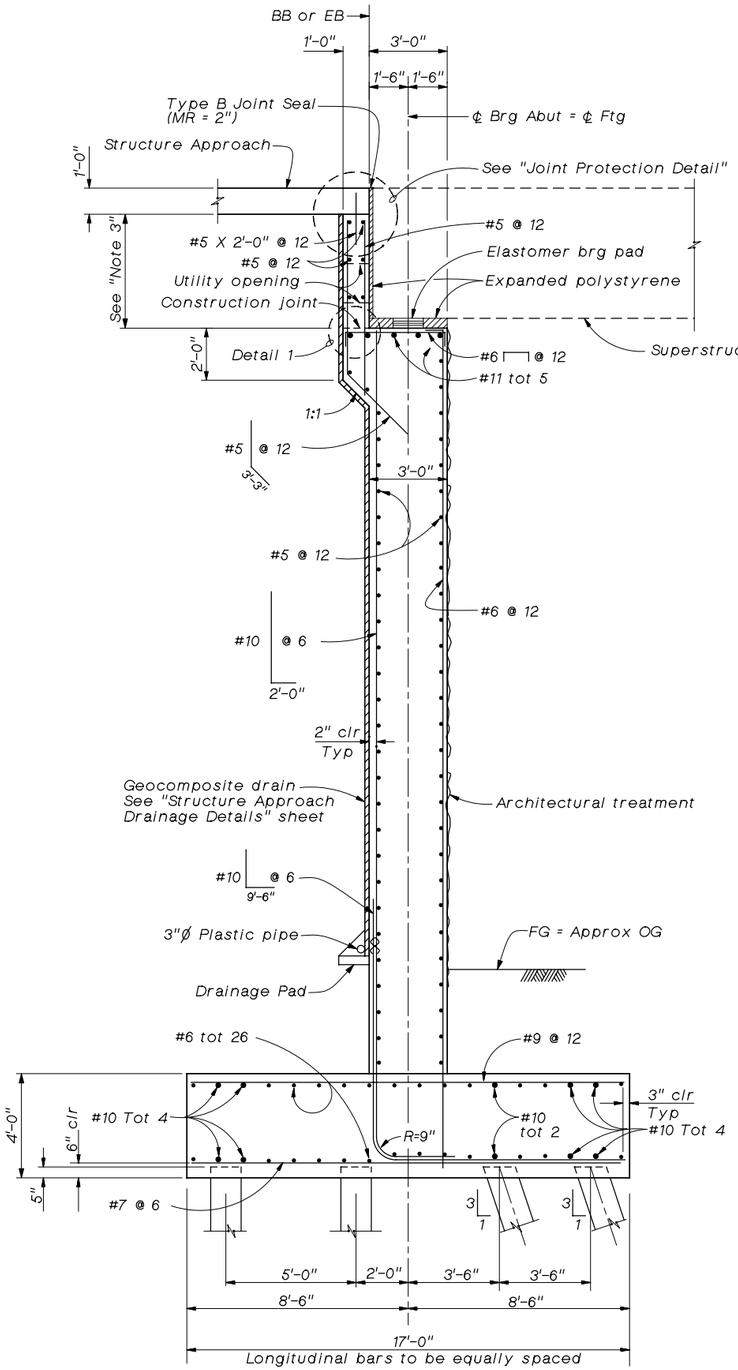

ABUTMENT SECTION

3/8" = 1'-0"

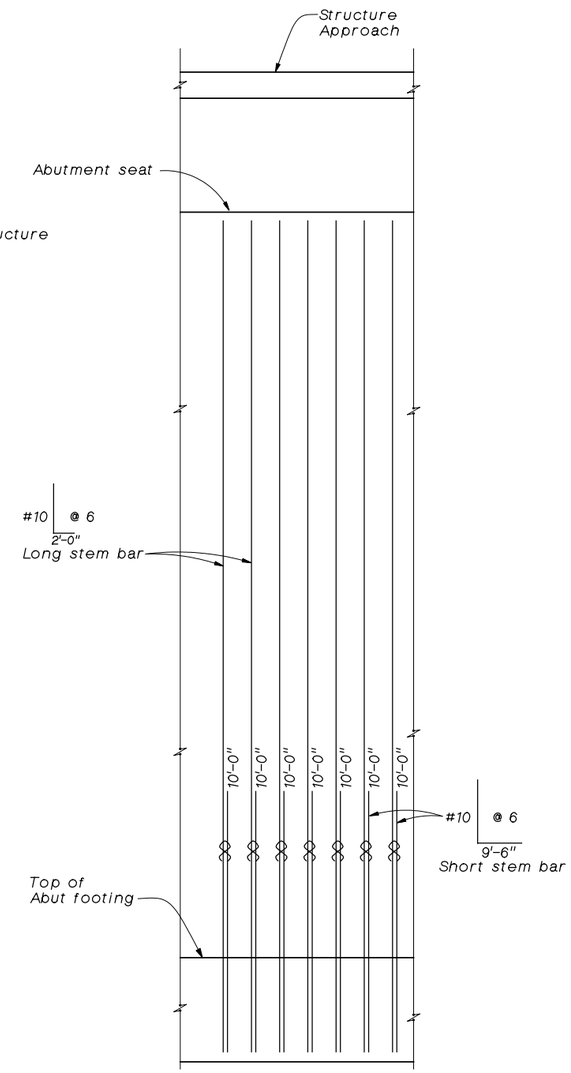

ELEVATION

3/8" = 1'-0"

1. Numbers at ends of bars indicate distance from top of footing.
2. ⌒ Indicates bundled bars
3. Place backwall after prestressing is completed.

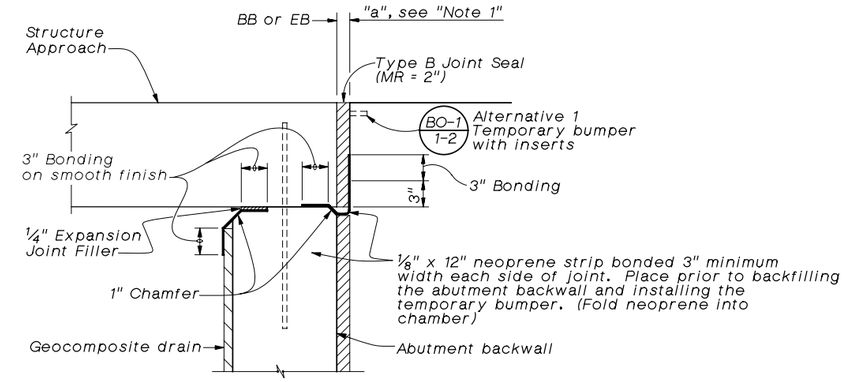

JOINT PROTECTION DETAIL

No Scale

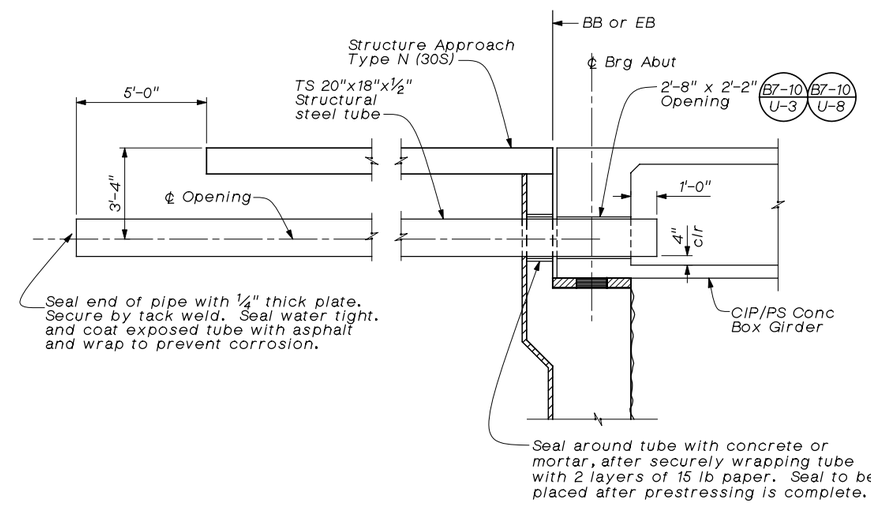

UTILITY OPENING AT ABUTMENT

No Scale

Notes;

1. For "A" dimension, see B6-21 (Use values corresponding to CIP/PS)
2. For utility opening reinforcement at Abutment backwall, see B7-10 U-2

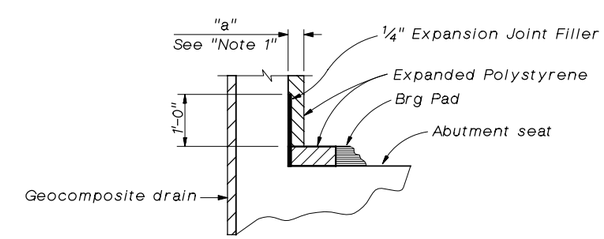

DETAIL 1

No Scale

Note:
The Contractor shall verify all controlling field dimensions before ordering or fabricating any material.

Underground Service Alert
Call: TOLL FREE 1-800 422-4133
TWO WORKING DAYS BEFORE YOU DIG

REGISTERED PROFESSIONAL ENGINEER M. CHAR C-057894 EXP. 6-30-06 CIVIL STATE OF CALIFORNIA

LAN
LIM & NASCIMENTO ENG. CORP.
1887 BUSINESS CENTER DR. SUITE 6
SAN BERNARDINO, CA 92408

M. CHAR R.C.E. 057894
MY LICENSE EXPIRES 6-30-06

3-15-06
DATE

LAN ENG JOB NO. COFM0202

MARK	REVISIONS	BY	APPR.	DATE

APPROVED _____ 2006
MICHAEL HUDSON, CITY OF MONT CLAIR REDEVELOPMENT/PUBLIC WORKS DEPARTMENT
REGISTERED CIVIL ENGINEER NO. _____
MY LICENSE EXPIRES _____

DRAWN BY: R. ANDRASEK
CHECKED BY: U. SANDIRASEGARAM
RECOMMENDED BY: M. CHAR

CITY OF MONTCLAIR
REDEVELOPMENT/PUBLIC WORKS DEPARTMENT
MONTE VISTA AVENUE GRADE SEPARATION
ABUTMENT DETAILS No. 1

CITY FILE NO ---
DRAWING NO 8 OF 21
SHEET 49 OF 82 SHEETS

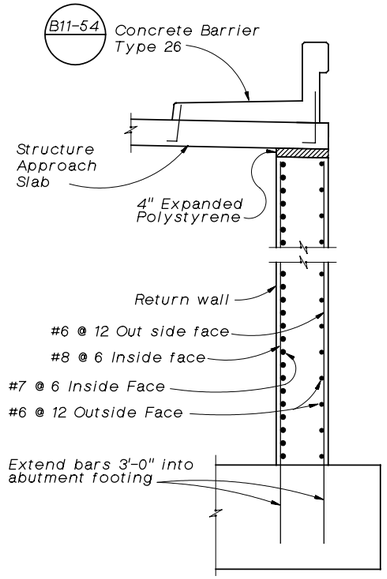

SECTION C-C

3/8" = 1'-0"

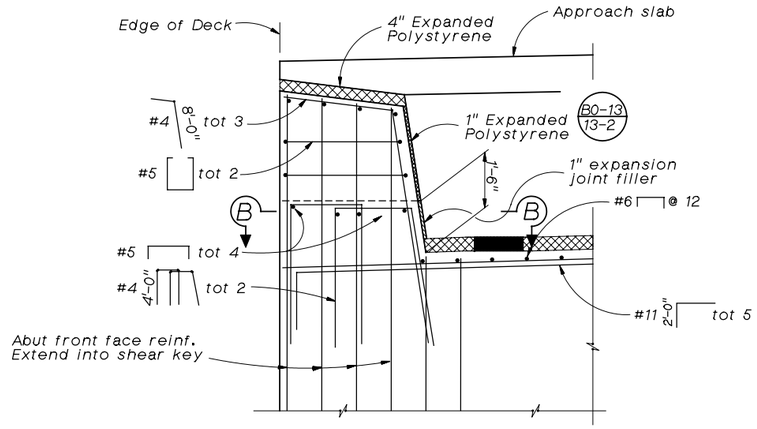

EXTERIOR SHEAR KEY

Scale: 1/2" = 1'-0"

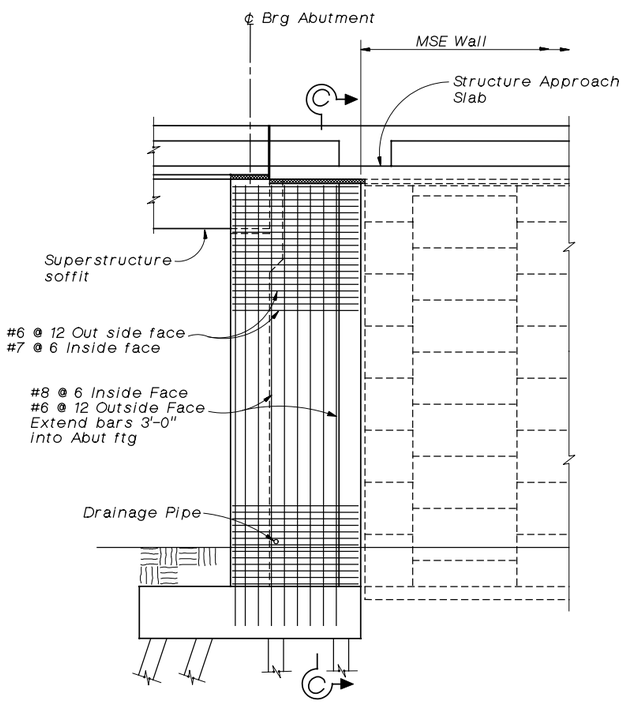

VIEW A-A

3/16" = 1'-0"

Abutment 4 shown, Abutment 1 similar.

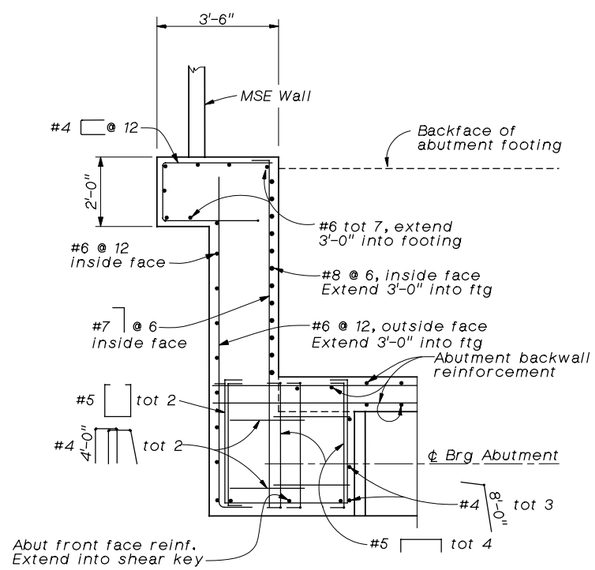

SECTION B-B

1/2" = 1'-0"

Notes:

1. For location of View A-A, see "Abutment 4 Layout" sheet.

100% SUBMITTAL
NOT FOR CONSTRUCTION
March 16, 2006

Note:
The Contractor shall verify all controlling field dimensions before ordering or fabricating any material.

Underground Service Alert
Call: TOLL FREE 1-800 422-4133
TWO WORKING DAYS BEFORE YOU DIG

REGISTERED PROFESSIONAL ENGINEER M. CHAR C-057894 EXP. 6-30-06 CIVIL STATE OF CALIFORNIA

LAN
LIM & NASCIMENTO ENG. CORP.
1887 BUSINESS CENTER DR. SUITE 6
SAN BERNARDINO, CA 92408

M. CHAR R.C.E. 057894
MY LICENSE EXPIRES 6-30-06
3-15-06
DATE

LAN ENG JOB NO. COFM0202

MARK	REVISIONS	BY	APPR.	DATE

APPROVED _____ 2006
MICHAEL HUDSON, CITY OF MONT CLAIR REDEVELOPMENT/PUBLIC WORKS DEPARTMENT
REGISTERED CIVIL ENGINEER NO. _____
MY LICENSE EXPIRES _____
DRAWN BY: R. ANDRASEK
CHECKED BY: U. SANDIRASEGARAM
RECOMMENDED BY: M. CHAR

CITY OF MONTCLAIR
REDEVELOPMENT/PUBLIC WORKS DEPARTMENT
MONTE VISTA AVENUE GRADE SEPARATION
ABUTMENT DETAILS No. 2

CITY FILE NO ---
DRAWING NO 9 OF 21
SHEET 50 OF 82 SHEETS

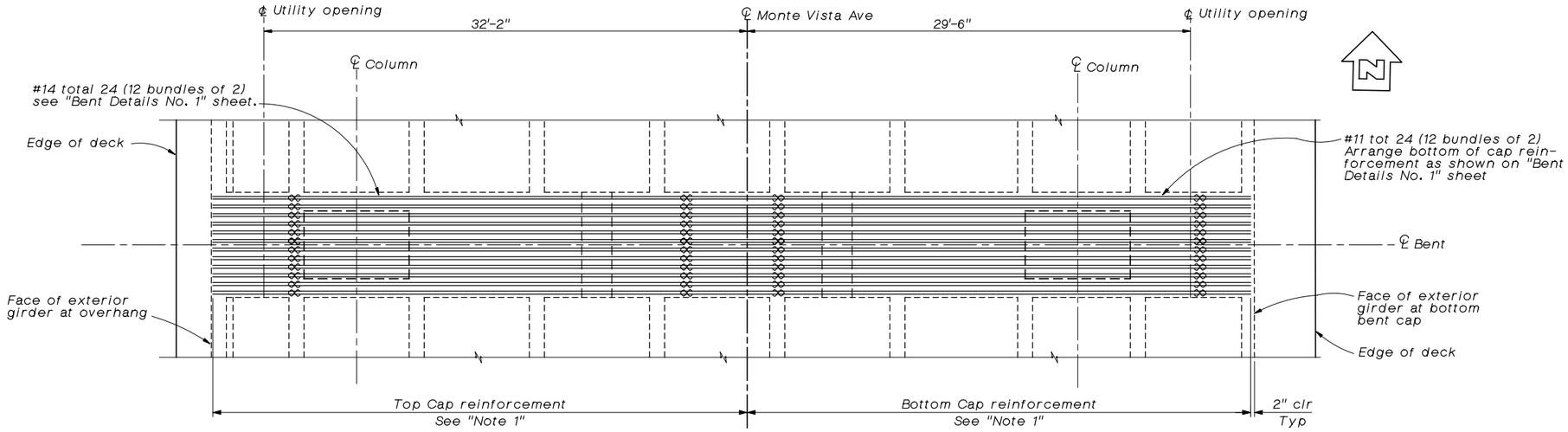

PLAN
1/4" = 1'-0"

⌒ Indicates bundled bars

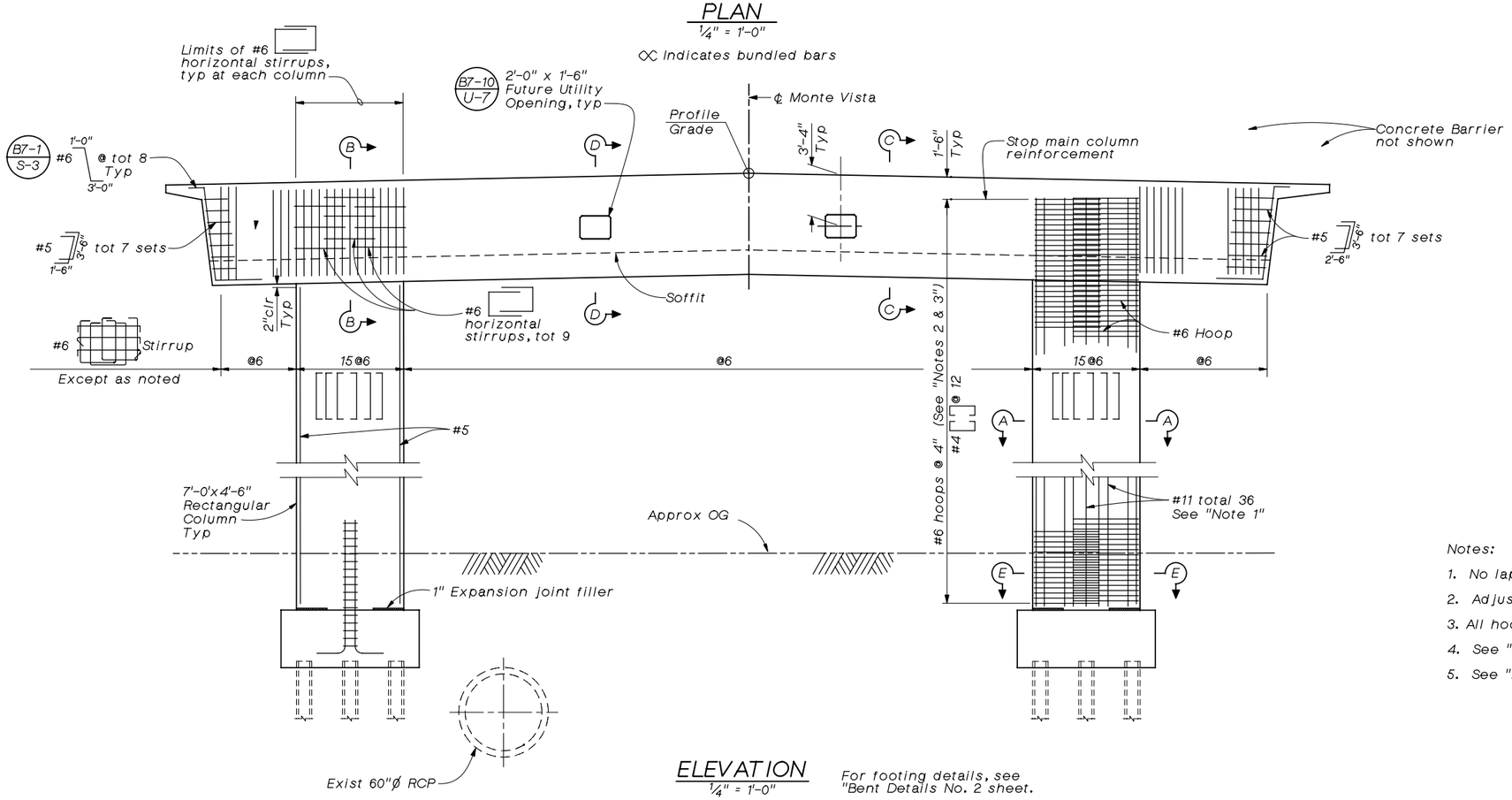

ELEVATION
1/4" = 1'-0"

For footing details, see "Bent Details No. 2 sheet.

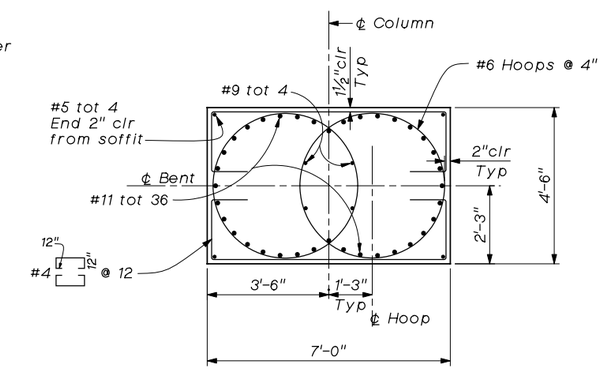

SECTION A-A
1/2" = 1'-0"

Notes:

1. No lap splices allowed in bent cap and main column reinforcement.
2. Adjust hoop spacing to clear bent cap bottom reinforcement.
3. All hoops are "Ultimate Butt Splice" connections.
4. See "Bent Details No. 1" sheet for "Sections B-B, C-C and D-D.
5. See "Bent Details No. 2" sheet for "Section E-E".

100% SUBMITTAL
NOT FOR CONSTRUCTION
March 16, 2006

Note:
The Contractor shall verify all controlling field dimensions before ordering or fabricating any material.

Underground Service Alert
Call: TOLL FREE 1-800 422-4133
TWO WORKING DAYS BEFORE YOU DIG

REGISTERED PROFESSIONAL ENGINEER M. CHAR C-057894 EXP. 6-30-06 CIVIL STATE OF CALIFORNIA

LAN
LIM & NASCIMENTO ENG. CORP.
1887 BUSINESS CENTER DR. SUITE 6
SAN BERNARDINO, CA 92408

M. CHAR R.C.E. 057894
MY LICENSE EXPIRES 6-30-06
3-15-06
DATE

LAN ENG JOB NO. COFM0202

MARK	REVISIONS	BY	APPR.	DATE

APPROVED _____ 2006
MICHAEL HUDSON, CITY OF MONT CLAIR REDEVELOPMENT/PUBLIC WORKS DEPARTMENT
REGISTERED CIVIL ENGINEER NO. _____
MY LICENSE EXPIRES _____
DRAWN BY: R. ANDRASEK
CHECKED BY: U. SANDIRASEGARAM
RECOMMENDED BY: M. CHAR

CITY OF MONTCLAIR
REDEVELOPMENT/PUBLIC WORKS DEPARTMENT
MONTE VISTA AVENUE
GRADE SEPARATION
BENT LAYOUT

CITY FILE NO ---
DRAWING NO 10 OF 21
SHEET 51 OF 82 SHEETS

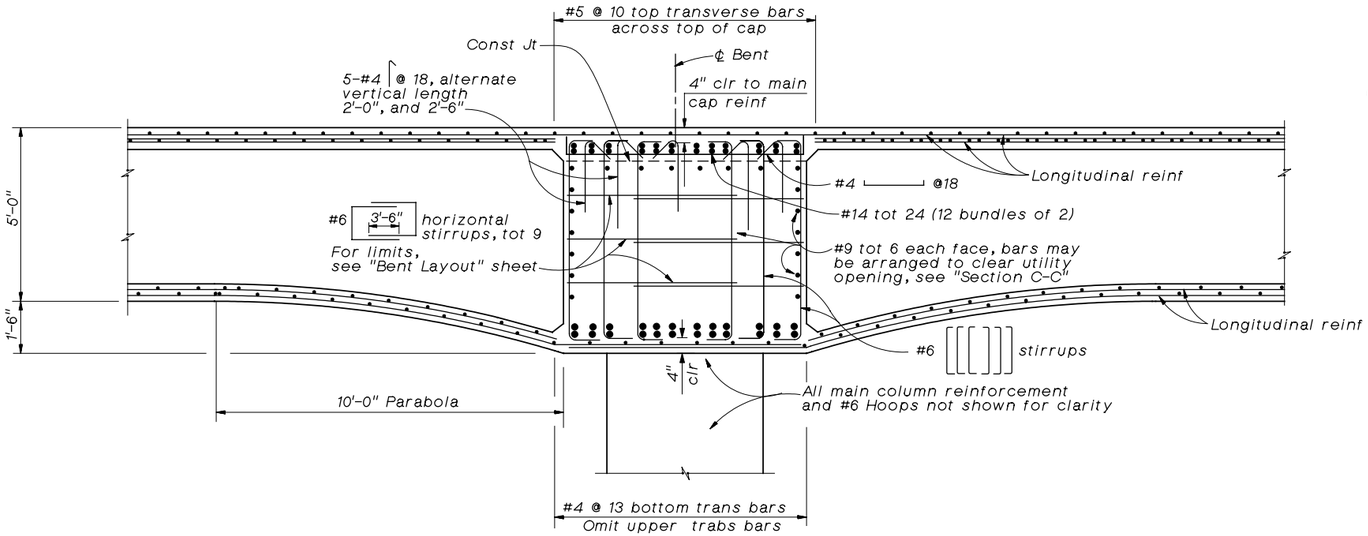

SECTION B-B

½" = 1'-0"

See Section C-C below for details not shown,

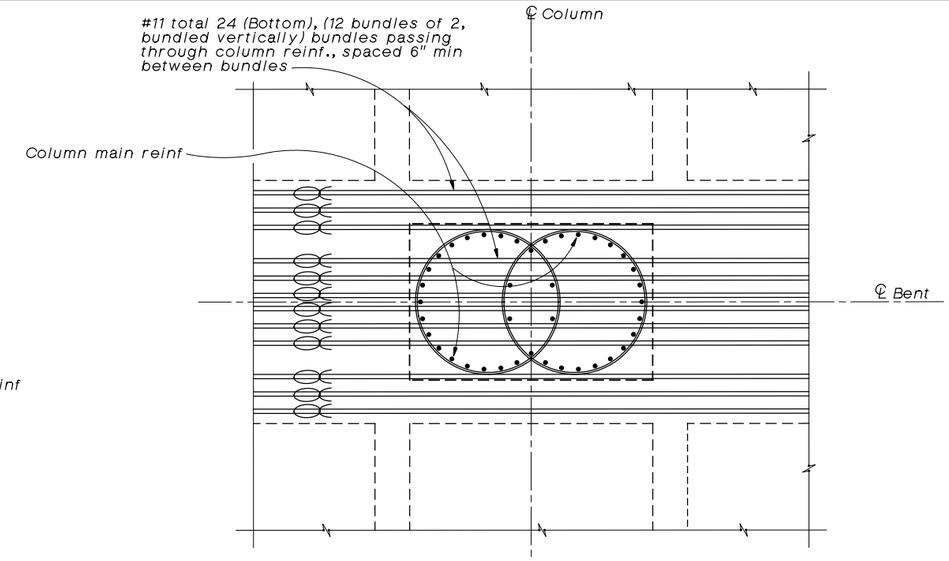

TOP OF COLUMN/BENT CAP REINF. DETAILS

½" = 1'-0"

Indicates bundled bars

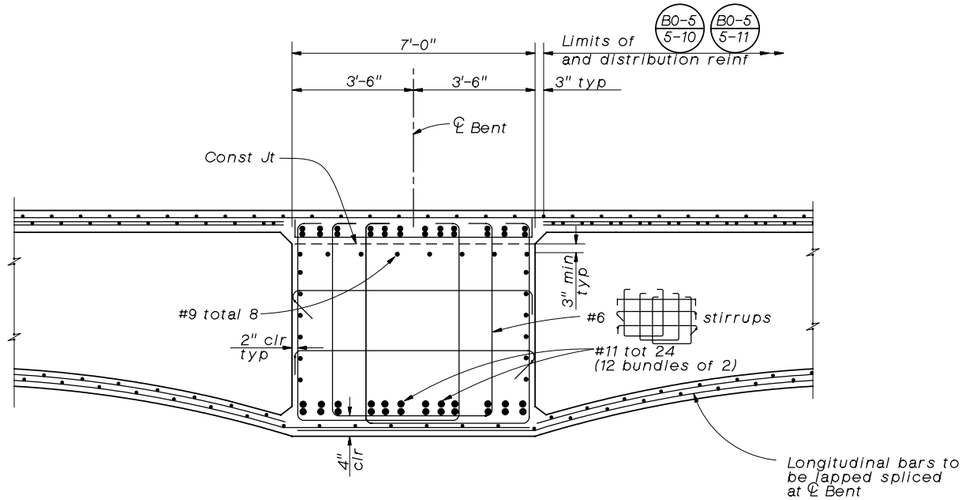

SECTION C-C

½" = 1'-0"

See Section B-B above for details not shown,

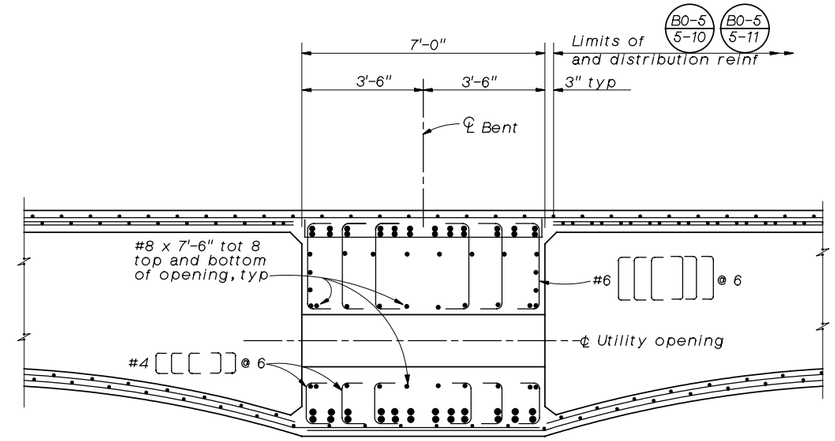

SECTION D-D

½" = 1'-0"

100% SUBMITTAL
NOT FOR CONSTRUCTION
March 16, 2006

Note:
The Contractor shall verify all controlling field dimensions before ordering or fabricating any material.

Underground Service Alert
Call: TOLL FREE 1-800 422-4133
TWO WORKING DAYS BEFORE YOU DIG

REGISTERED PROFESSIONAL ENGINEER M. CHAR C-057894 EXP. 6-30-06 CIVIL STATE OF CALIFORNIA

LAN LIM & NASCIMENTO ENG. CORP.
1887 BUSINESS CENTER DR. SUITE 6
SAN BERNARDINO, CA 92408

M. CHAR R.C.E. 057894
MY LICENSE EXPIRES 6-30-06
3-15-06
DATE

LAN ENG JOB NO. COFM0202

MARK	REVISIONS	BY	APPR.	DATE

APPROVED _____ 2006
MICHAEL HUDSON, CITY OF MONT CLAIR REDEVELOPMENT/PUBLIC WORKS DEPARTMENT
REGISTERED CIVIL ENGINEER NO. _____
MY LICENSE EXPIRES _____
DRAWN BY: R. ANDRASEK
CHECKED BY: U. SANDIRASEGARAM
RECOMMENDED BY: M. CHAR

CITY OF MONTCLAIR
REDEVELOPMENT/PUBLIC WORKS DEPARTMENT
MONTE VISTA AVENUE
GRADE SEPARATION
BENT DETAILS No. 1

CITY FILE NO ---
DRAWING NO 11 OF 21
SHEET 52 OF 82 SHEETS

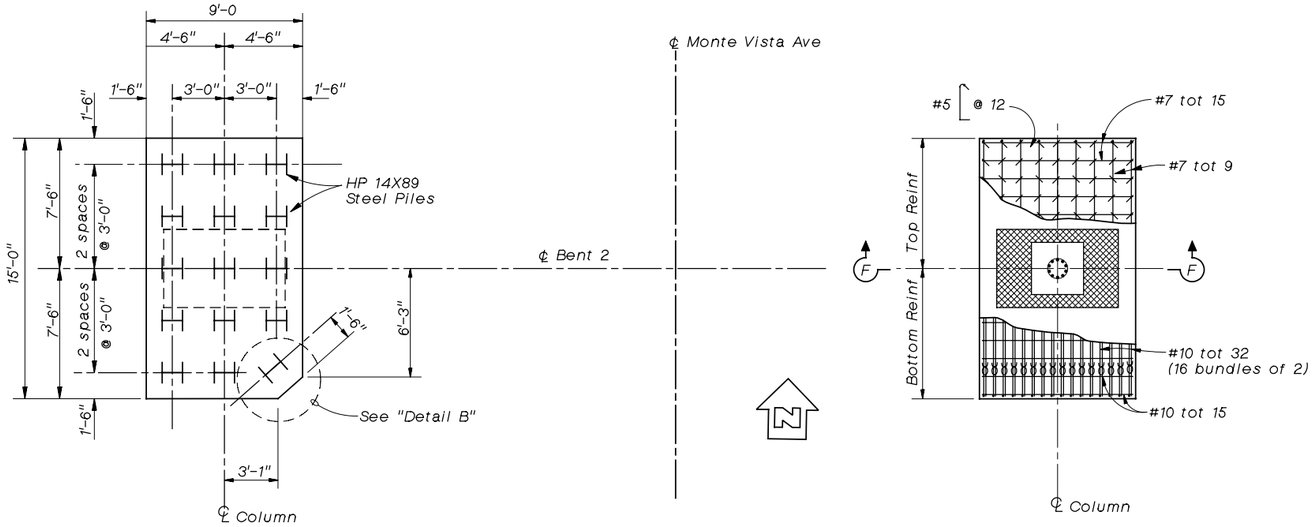

BENT 2 FOOTING LAYOUT

1/4" = 1'-0"

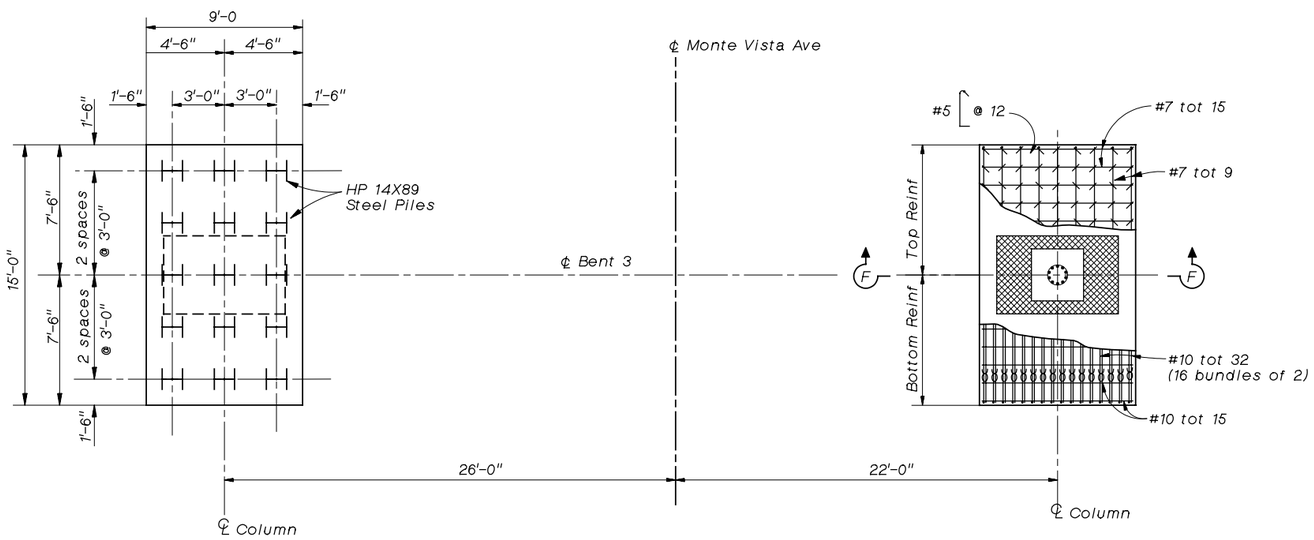

BENT 3 FOOTING LAYOUT

1/4" = 1'-0"

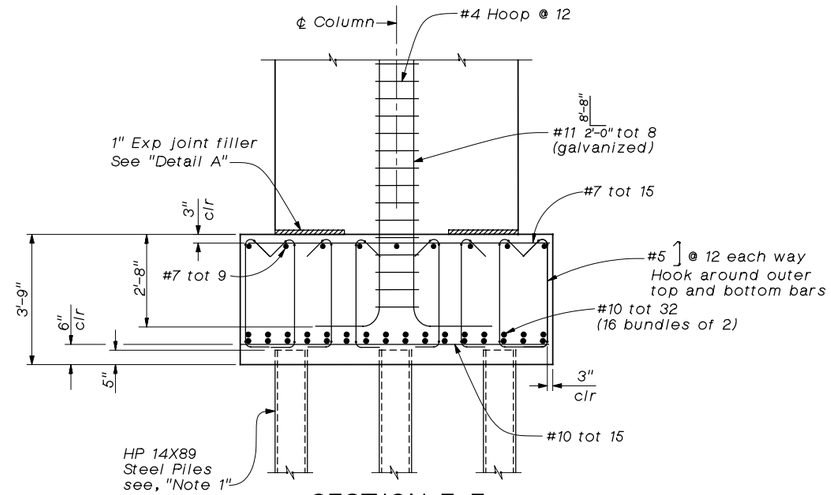

SECTION F-F

1/2" = 1'-0"

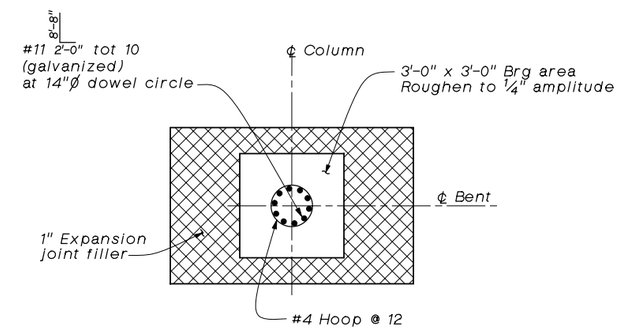

DETAIL "A"

1/2" = 1'-0"

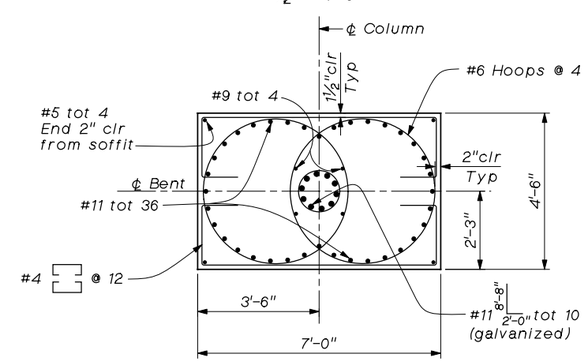

SECTION E-E

1/2" = 1'-0"

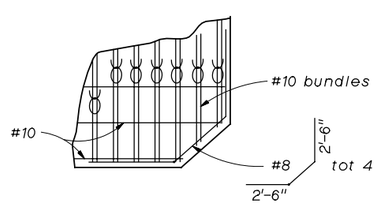

DETAIL B

No scale

Bottom reinforcing shown

Note:
1. For Pile Anchor Detail, see "Abutment Pile Layout" sheet.

100% SUBMITTAL
NOT FOR CONSTRUCTION
March 16, 2006

Note:
The Contractor shall verify all controlling field dimensions before ordering or fabricating any material.

Underground Service Alert
Call: TOLL FREE 1-800 422-4133
TWO WORKING DAYS BEFORE YOU DIG

PROFESSIONAL ENGINEER M. CHAR C-057894 EXP. 6-30-06 CIVIL STATE OF CALIFORNIA

LAN LIM & NASCIMENTO ENG. CORP.
1887 BUSINESS CENTER DR. SUITE 6
SAN BERNARDINO, CA 92408

M. CHAR R.C.E. 057894
MY LICENSE EXPIRES 6-30-06

3-15-06
DATE

LAN ENG JOB NO. COFM0202

MARK	REVISIONS	BY	APPR.	DATE

APPROVED _____ 2006

MICHAEL HUDSON, CITY OF MONT CLAIR
REDEVELOPMENT/PUBLIC WORKS DEPARTMENT
REGISTERED CIVIL ENGINEER NO. _____
MY LICENSE EXPIRES _____

DRAWN BY: R. ANDRASEK

CHECKED BY: U. SANDIRASEGARAM

RECOMMENDED BY: M. CHAR

CITY OF MONTCLAIR
REDEVELOPMENT/PUBLIC WORKS DEPARTMENT

MONTE VISTA AVENUE
GRADE SEPARATION

BENT DETAILS No. 2

CITY FILE NO ---

DRAWING NO 12 OF 21

SHEET 53 OF 82 SHEETS

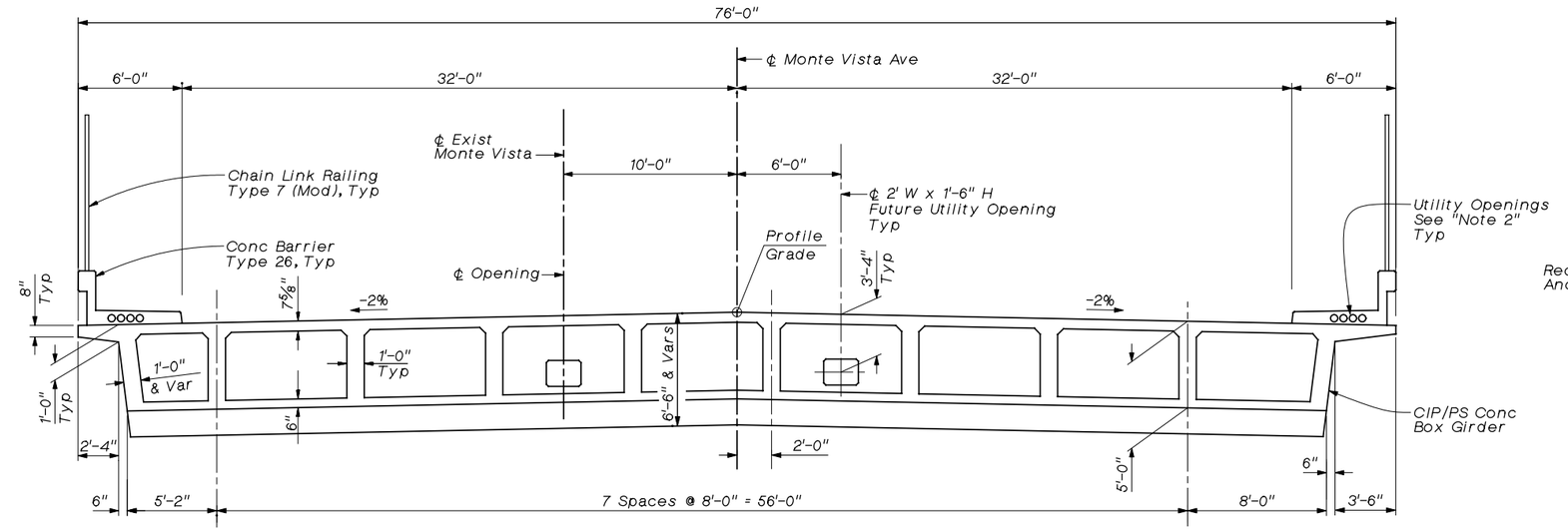

TYPICAL SECTION

1/4" = 1'-0"

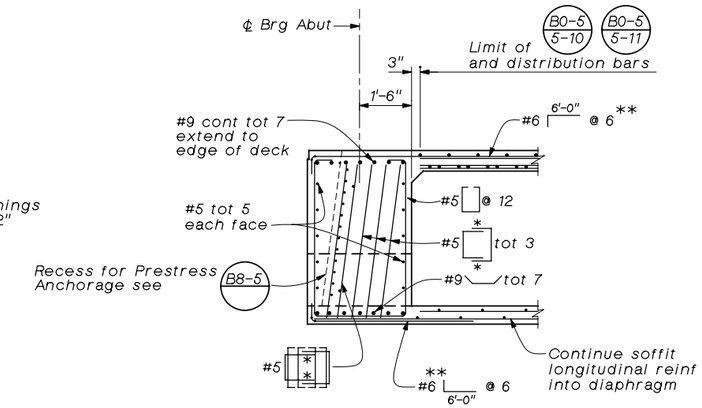

END DIAPHRAGM

1/2" = 1'-0"

* To be determined by the Post-Tensioner and verified by the Engineer prior to construction.

** Place normal to and space along ℄ Brg

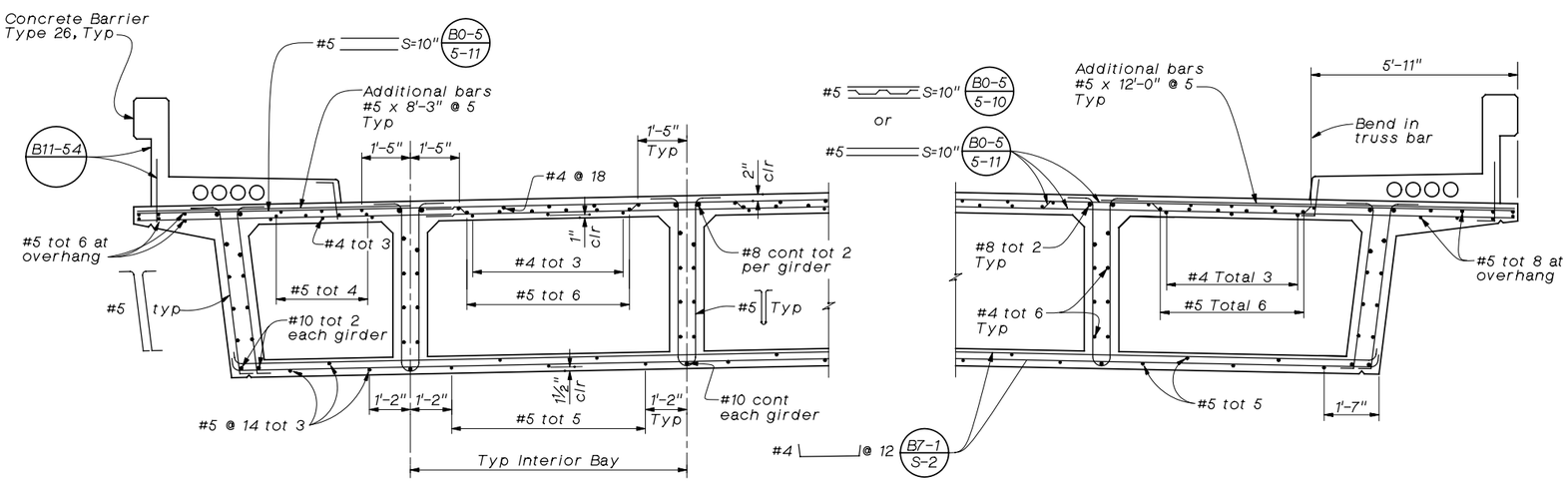

PART TYPICAL SECTION B0-5 B7-1 B8-5

1/2" = 1'-0"

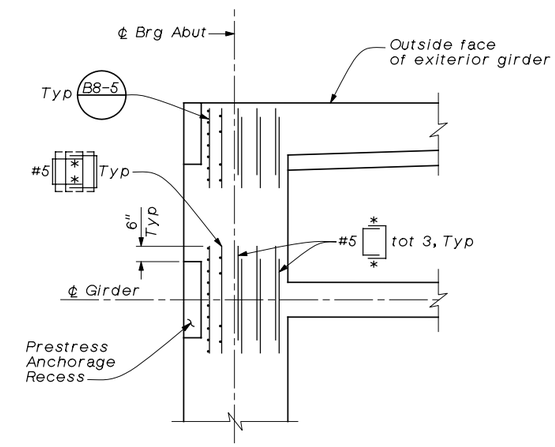

END DIAPHRAGM PART PLAN

1/2" = 1'-0"

Reinforcement shown is additional to reinforcement shown on B8-5

* To be determined by the Post-Tensioner and verified by the Engineer prior to construction.

Notes:

1. For details at variable section (near Bent cap) see "Typical Section No. 2" sheet.
2. For utility openings in sidewalk, see "Mechanically Stabilized Embankment Details No. 1" sheet. The no. of openings include the minimum required per B11-54

100% SUBMITTAL
NOT FOR CONSTRUCTION
March 16, 2006

Note:
The Contractor shall verify all controlling field dimensions before ordering or fabricating any material.

Underground Service Alert
Call: TOLL FREE 1-800 422-4133
TWO WORKING DAYS BEFORE YOU DIG

REGISTERED PROFESSIONAL ENGINEER M. CHAR C-057894 EXP. 6-30-06 CIVIL STATE OF CALIFORNIA

LAN
LIM & NASCIMENTO ENG. CORP.
1887 BUSINESS CENTER DR. SUITE 6
SAN BERNARDINO, CA 92408

M. CHAR R.C.E. 057894
MY LICENSE EXPIRES 6-30-06
3-15-06
DATE

LAN ENG JOB NO. COFM0202

MARK	REVISIONS	BY	APPR.	DATE

APPROVED _____ 2006
MICHAEL HUDSON, CITY OF MONT CLAIR REDEVELOPMENT/PUBLIC WORKS DEPARTMENT
REGISTERED CIVIL ENGINEER NO. _____
MY LICENSE EXPIRES _____
DRAWN BY: R. ANDRASEK
CHECKED BY: U. SANDIRASEGARAM
RECOMMENDED BY: M. CHAR

CITY OF MONTCLAIR
REDEVELOPMENT/PUBLIC WORKS DEPARTMENT
MONTE VISTA AVENUE
GRADE SEPARATION
TYPICAL SECTION No. 1

CITY FILE NO ---
DRAWING NO 13 OF 21
SHEET 54 OF 82 SHEETS

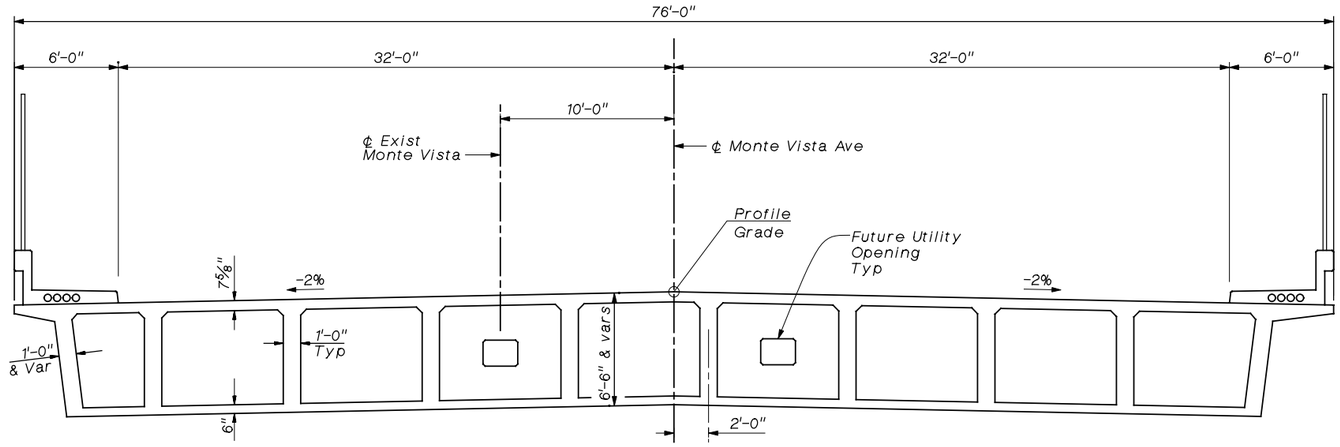

TYPICAL SECTION NEAR BENT CAP

¼" = 1'-0"

For girder spacing, see Typical Section No. 1" sheet.

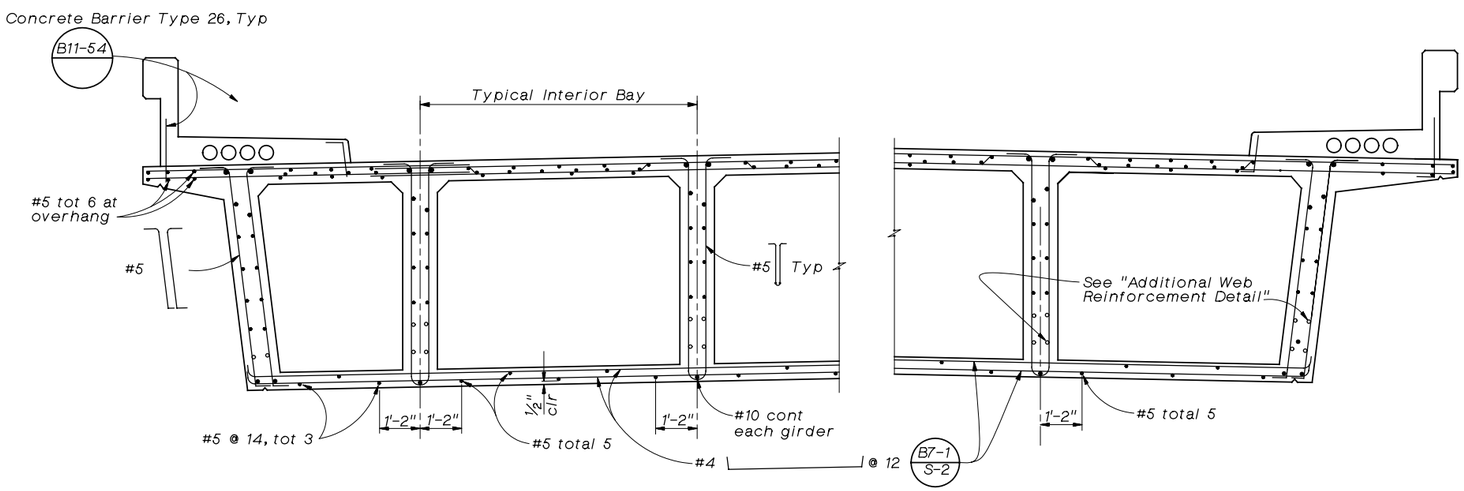

PART TYPICAL SECTION B0-5 B7-1 B8-5

½" = 1'-0"

For details not shown, see Typical Section No. 1" sheet.

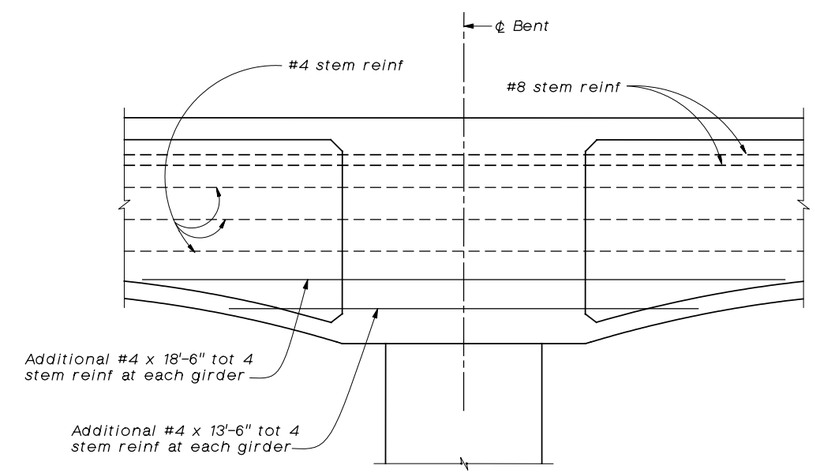

ADDITIONAL WEB REINFORCEMENT DETAIL

½" = 1'-0"

100% SUBMITTAL
NOT FOR CONSTRUCTION
March 16, 2006

Note:
The Contractor shall verify all controlling field dimensions before ordering or fabricating any material.

Underground Service Alert
Call: TOLL FREE 1-800 422-4133
TWO WORKING DAYS BEFORE YOU DIG

REGISTERED PROFESSIONAL ENGINEER M. CHAR C-057894 EXP. 6-30-06 CIVIL STATE OF CALIFORNIA

LAN
LIM & NASCIMENTO ENG. CORP.
1887 BUSINESS CENTER DR. SUITE 6
SAN BERNARDINO, CA 92408

M. CHAR R.C.E. 057894
MY LICENSE EXPIRES 6-30-06
3-15-06
DATE

LAN ENG JOB NO. COFM0202

MARK	REVISIONS	BY	APPR.	DATE

APPROVED _____ 2006
MICHAEL HUDSON, CITY OF MONT CLAIR
REDEVELOPMENT/PUBLIC WORKS DEPARTMENT
REGISTERED CIVIL ENGINEER NO. _____
MY LICENSE EXPIRES _____

DRAWN BY: R. ANDRASEK
CHECKED BY: U. SANDIRASEGARAM
RECOMMENDED BY: M. CHAR

CITY OF MONTCLAIR
REDEVELOPMENT/PUBLIC WORKS DEPARTMENT
MONTE VISTA AVENUE
GRADE SEPARATION

TYPICAL SECTION No. 2

CITY FILE NO ———
DRAWING NO 14 OF 21
SHEET 55 OF 82 SHEETS

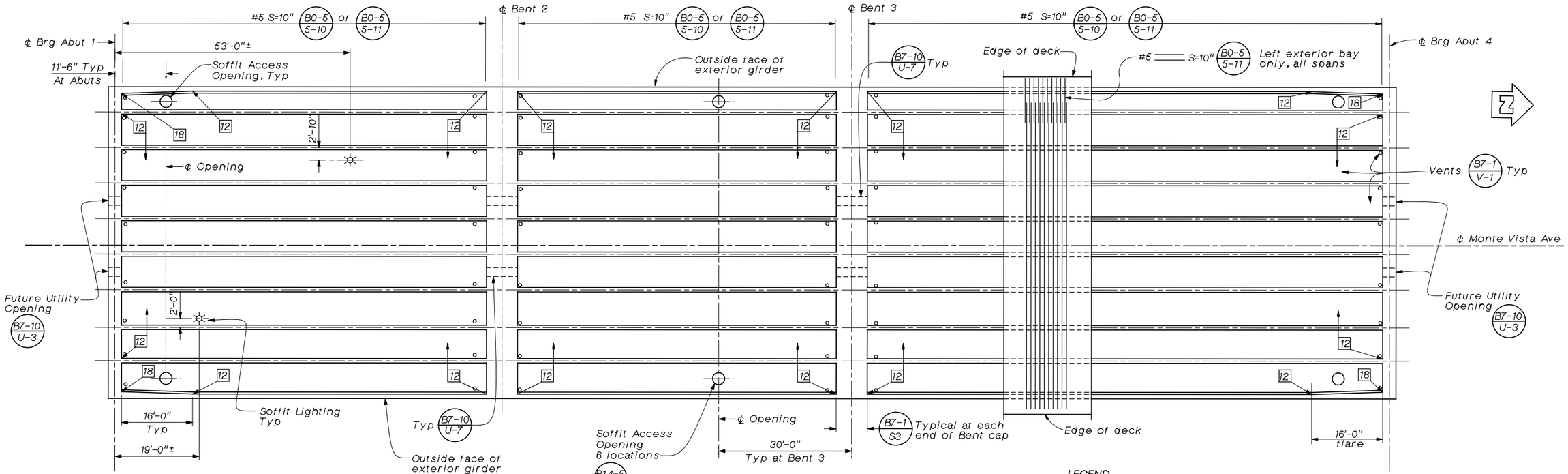

GIRDER LAYOUT

3/32 "=1'-0"

B0-5 B7-1 B8-5

LEGEND

12 Indicates stem width in inches

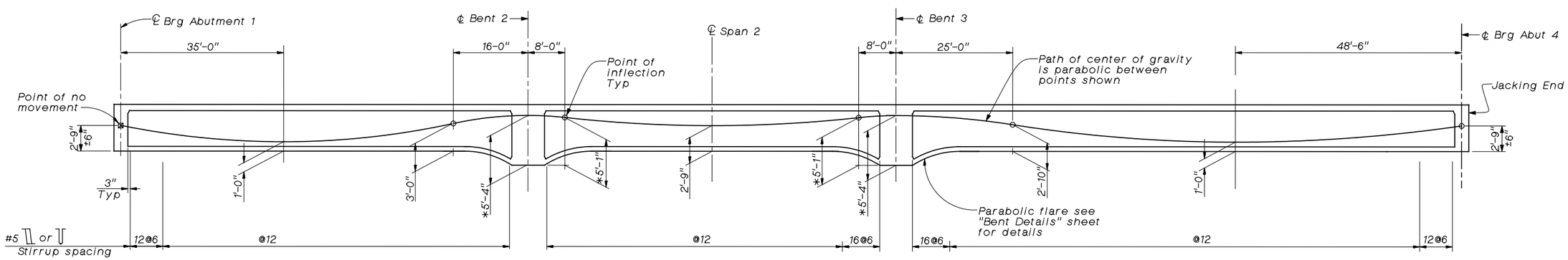

LONGITUDINAL SECTION

No scale

Note:
* Offsets are given from bottom of bent cap to CG of tendon.

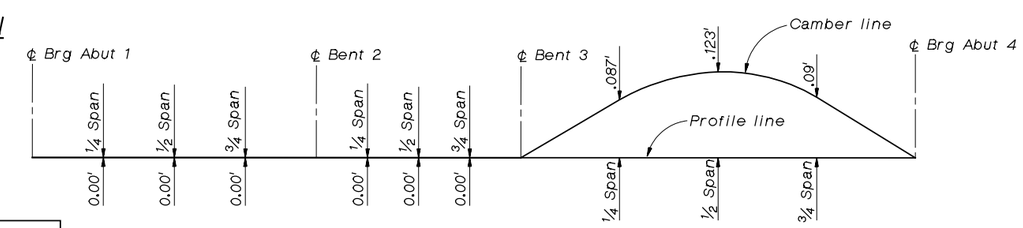

CAMBER DIAGRAM

No scale

Camber values shown does not include allowance for falsework settlement

PRESTRESSING NOTES

270 ksi low relaxation strand:

Pjack = 15,400 kips

Anchor set = 3/8 inch

Total number of girders = 10

Distribution of prestress force (Pjack) between girders shall not exceed the ratio of 3:2. Maximum final force variation between girders shall not exceed 725 kips.

Concrete: f'c = 4,500 psi @ 28 days

f'ci = 4,000 psi @ time of stressing

Contractor shall submit elongation calculations based on initial stresses at ☒ = 0.844 times jacking stress.

One end stressing shall be performed from Abutment 4 end only.

Note:
The Contractor shall verify all controlling field dimensions before ordering or fabricating any material.

100% SUBMITTAL
NOT FOR CONSTRUCTION
December 21, 2005

Underground Service Alert
Call: TOLL FREE 1-800 422-4133
TWO WORKING DAYS BEFORE YOU DIG

REGISTERED PROFESSIONAL ENGINEER M. CHAR C-057894 EXP. 6-30-06 CIVIL STATE OF CALIFORNIA

LAN
LIM & NASCIMENTO ENG. CORP.
1887 BUSINESS CENTER DR. SUITE 6
SAN BERNARDINO, CA 92408

M. CHAR R.C.E. 057894
MY LICENSE EXPIRES 6-30-06
3-15-06
DATE

LAN ENG JOB NO. COFM0202

MARK	REVISIONS	BY	APPR.	DATE

APPROVED _____ 2006
MICHAEL HUDSON, CITY OF MONT CLAIR REDEVELOPMENT/PUBLIC WORKS DEPARTMENT
REGISTERED CIVIL ENGINEER NO. _____
MY LICENSE EXPIRES _____
DRAWN BY: R. ANDRASEK
CHECKED BY: U. SANDIRASEGARAM
RECOMMENDED BY: M. CHAR

CITY OF MONTCLAIR
REDEVELOPMENT/PUBLIC WORKS DEPARTMENT
MONTE VISTA AVENUE GRADE SEPARATION
GIRDER LAYOUT

CITY FILE NO --------
DRAWING NO 15 OF 21
SHEET 56 OF 82 SHEETS

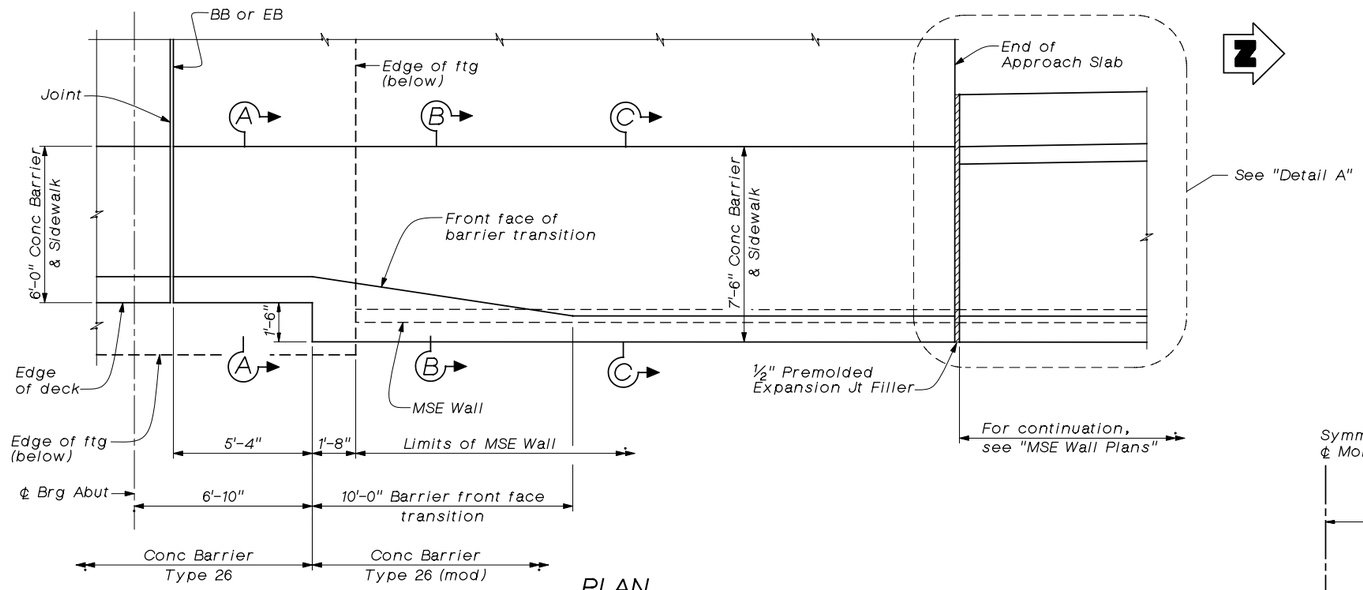

PLAN

CONCRETE BARRIER TRANSITION AT ABUTMENTS

⅜" = 1'-0"

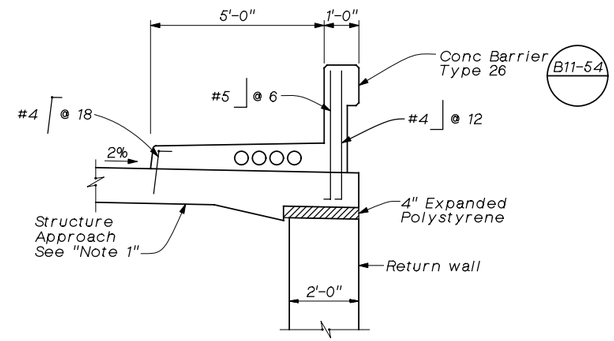

SECTION A-A

½" = 1'-0"

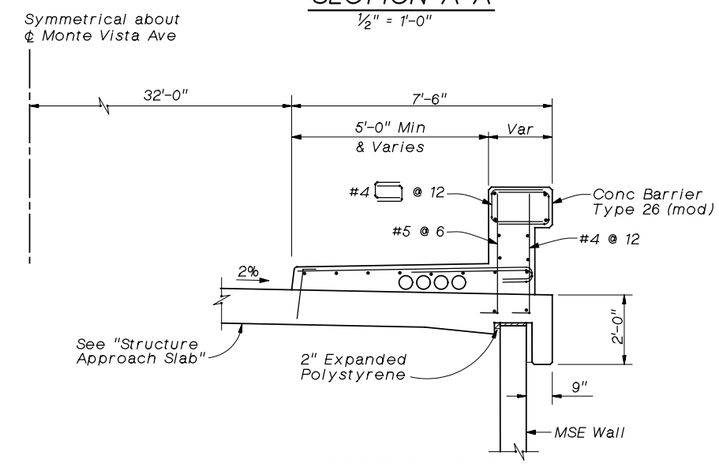

SECTION B-B

½" = 1'-0"

(For reinforcement not shown, see "Section C-C")

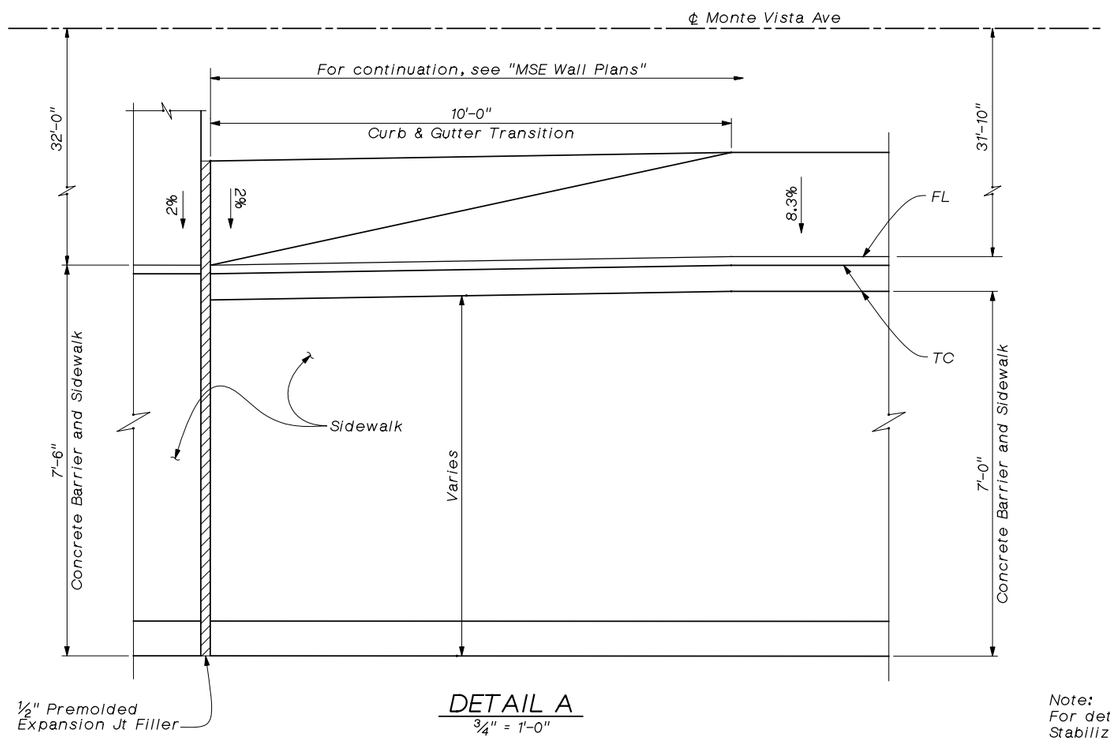

DETAIL A

¾" = 1'-0"

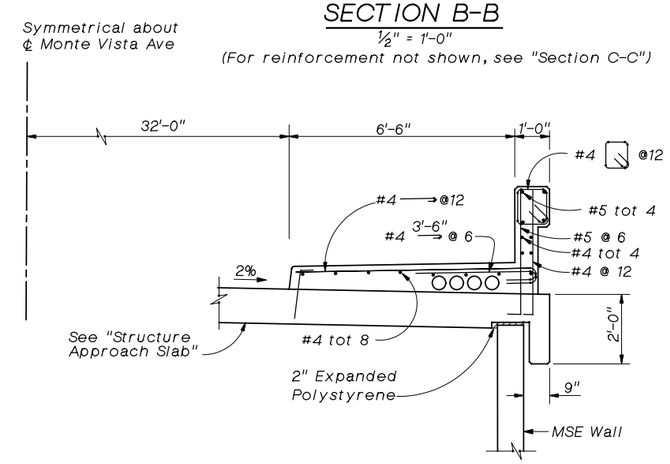

SECTION C-C

½" = 1'-0"

Note:
For details not shown, see "Mechanically Stabilized Embankment Details No. 1 & No. 5" sheets.

Notes:

1. For details, see "Structure Approach Type N30S)" sheet.

100% SUBMITTAL
NOT FOR CONSTRUCTION
March 16, 2006

Note:
The Contractor shall verify all controlling field dimensions before ordering or fabricating any material.

Underground Service Alert
Call: TOLL FREE 1-800 422-4133
TWO WORKING DAYS BEFORE YOU DIG

REGISTERED PROFESSIONAL ENGINEER M. CHAR C-057894 EXP. 6-30-06 CIVIL STATE OF CALIFORNIA

LAN
LIM & NASCIMENTO ENG. CORP.
1887 BUSINESS CENTER DR. SUITE 6
SAN BERNARDINO, CA 92408

M. CHAR R.C.E. 057894
MY LICENSE EXPIRES 6-30-06
3-15-06
DATE

LAN ENG JOB NO. COFM0202

MARK	REVISIONS	BY	APPR.	DATE

APPROVED _____ 2006
MICHAEL HUDSON, CITY OF MONT CLAIR REDEVELOPMENT/PUBLIC WORKS DEPARTMENT
REGISTERED CIVIL ENGINEER NO. _____
MY LICENSE EXPIRES _____
DRAWN BY: R. ANDRASEK
CHECKED BY: U. SANDIRASEGARAM
RECOMMENDED BY: M. CHAR

CITY OF MONTCLAIR
REDEVELOPMENT/PUBLIC WORKS DEPARTMENT
MONTE VISTA AVENUE
GRADE SEPARATION
CONCRETE BARRIER TYPE 26 (MODIFIED)

CITY FILE NO --------
DRAWING NO 16 OF 21
SHEET 57 OF 82 SHEETS

Note:
For sections applicable to the structure approach slab at the MSE wall, see "Concrete Barrier Type 26 (Modified)" sheet

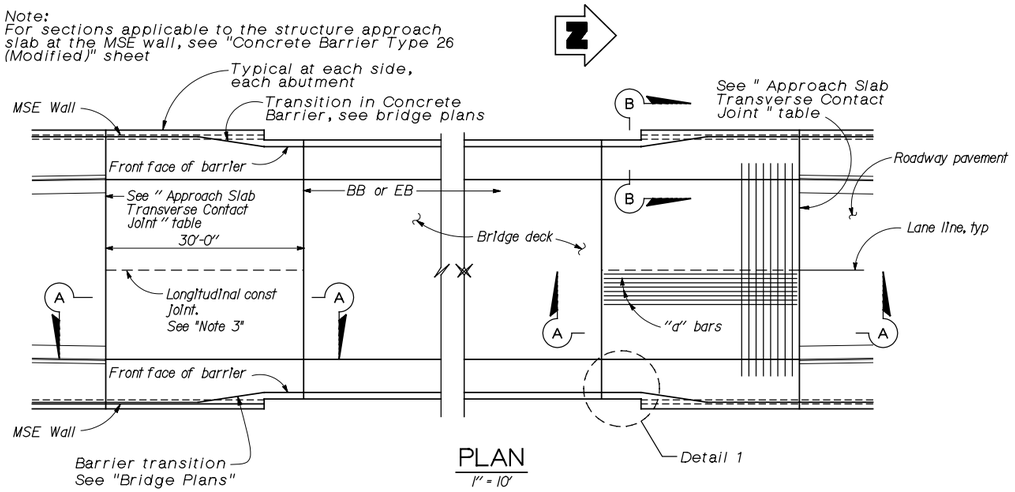

PLAN
1" = 10'

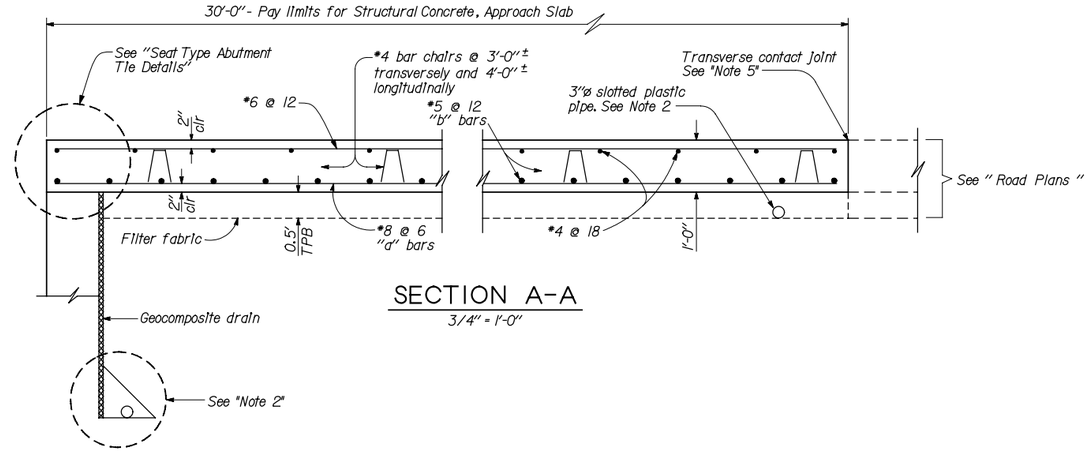

SECTION A-A
3/4" = 1'-0"

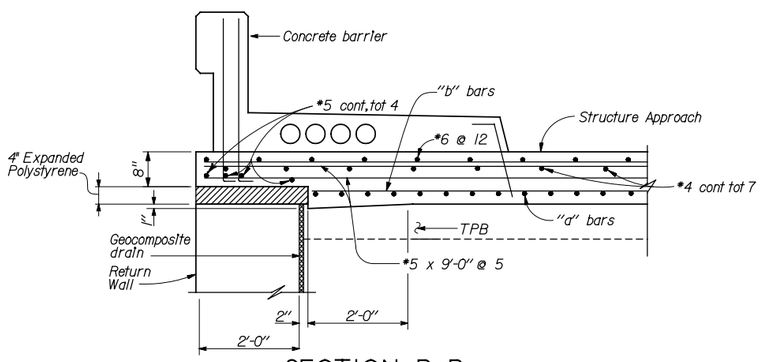

SECTION B-B
3/4" = 1'-0"

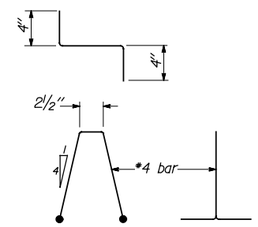

BAR CHAIR DETAIL
1½" = 1'-0"

APPROACH SLAB TRANSVERSE CONTACT JOINT		
APPROACH SKEW	WITH AC ROADWAY PAVEMENT	WITH PCC ROADWAY PAVEMENT
< 20°	Parallel to face of paving notch	Parallel to face of paving notch

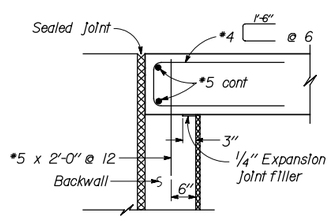

MR ≤ 2"

SEAT TYPE ABUTMENT TIE DETAILS (SEE NOTE 1)
3/4" = 1'-0"

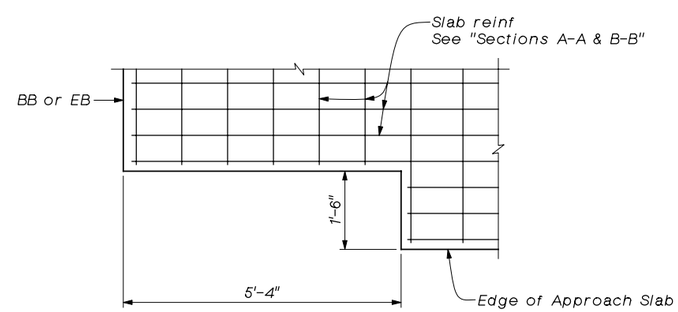

DETAIL 1
3/4" = 1'-0"

Notes:

1. For details not shown, see Structure Plans. For MR ≤ 2", adjust bar reinforcement to clear a sawcut for sealed joint, when required.
2. For drainage details, see " Structure Approach Drainage Details " sheet.
3. Longitudinal construction joints, when permitted by the Engineer, shall be located on lane lines.
4. End angle at beginning of barrier transition, end of wingwall or end of structure approach, as applicable.
5. For transverse contact joint with new PCC paving, refer to Standard Plan A35-A.
6. At the contractor's option, approach slab transverse reinforcement may be placed parallel to paving notch. Spacing of transverse reinforcement is measured along ℄ roadway.

100% SUBMITTAL
NOT FOR CONSTRUCTION
March 16, 2006

Note:
The Contractor shall verify all controlling field dimensions before ordering or fabricating any material.

Underground Service Alert
Call: TOLL FREE 1-800 422-4133
TWO WORKING DAYS BEFORE YOU DIG

REGISTERED PROFESSIONAL ENGINEER M. CHAR C-057894 EXP. 6-30-06 CIVIL STATE OF CALIFORNIA

LAN
LIM & NASCIMENTO ENG. CORP.
1887 BUSINESS CENTER DR. SUITE 6
SAN BERNARDINO, CA 92408

M. Char 3-15-06
M. CHAR R.C.E. 057894 DATE
MY LICENSE EXPIRES 6-30-06

LAN ENG JOB NO. COFM0202

MARK	REVISIONS	BY	APPR.	DATE

APPROVED _____ 2006
MICHAEL HUDSON, CITY OF MONT CLAIR REDEVELOPMENT/PUBLIC WORKS DEPARTMENT
REGISTERED CIVIL ENGINEER NO. _____
MY LICENSE EXPIRES _____
DRAWN BY: R. ANDRASEK
CHECKED BY: U. SANDIRASEGARAM
RECOMMENDED BY: M. CHAR

CITY OF MONTCLAIR
REDEVELOPMENT/PUBLIC WORKS DEPARTMENT
MONTE VISTA AVENUE GRADE SEPARATION
STRUCTURE APPROACH TYPE N(30S)

CITY FILE NO ---------
DRAWING NO 17 OF 21
SHEET 58 OF 82 SHEETS

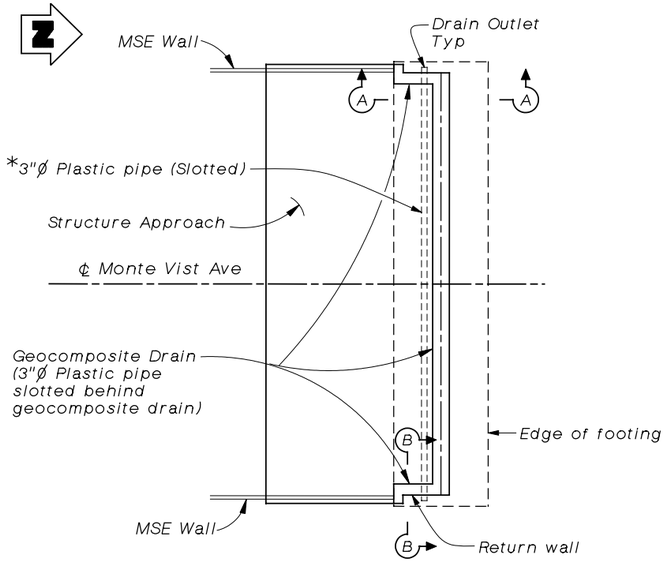

TYPICAL PLAN

No Scale
(Abutment 1 shown, Abutment 4 similar)

Notes:

1. See "Abutment 1 Layout" & "Abutment 4 Layout" sheets for details.
2. Geocomposite drain, cement treated permeable base, and 3"Ø slotted plastic pipe continuous behind Abutment wall.

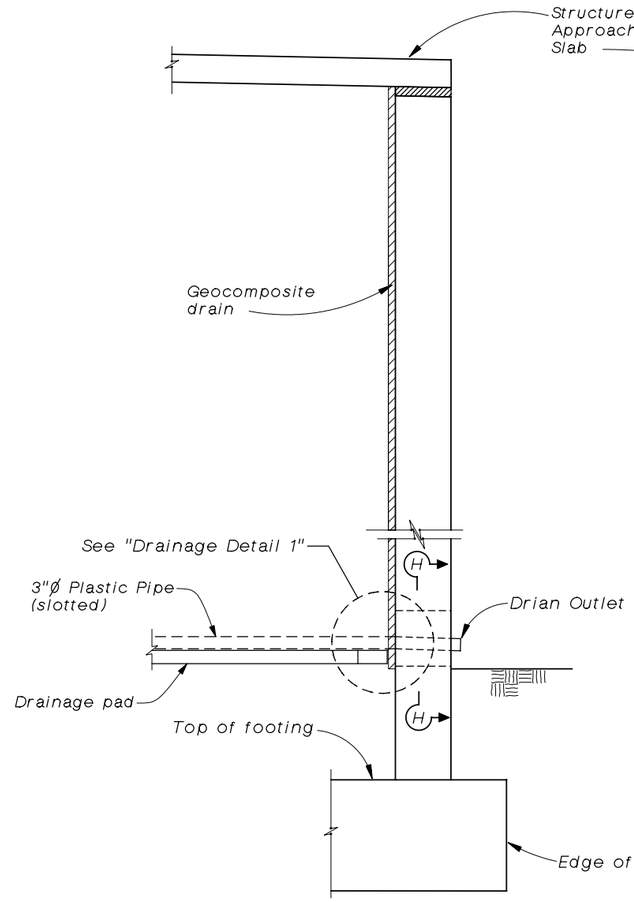

SECTION B-B

No scale

Note:
Bends and junctions in 3" plastic pipe are 2'-6" min radius.

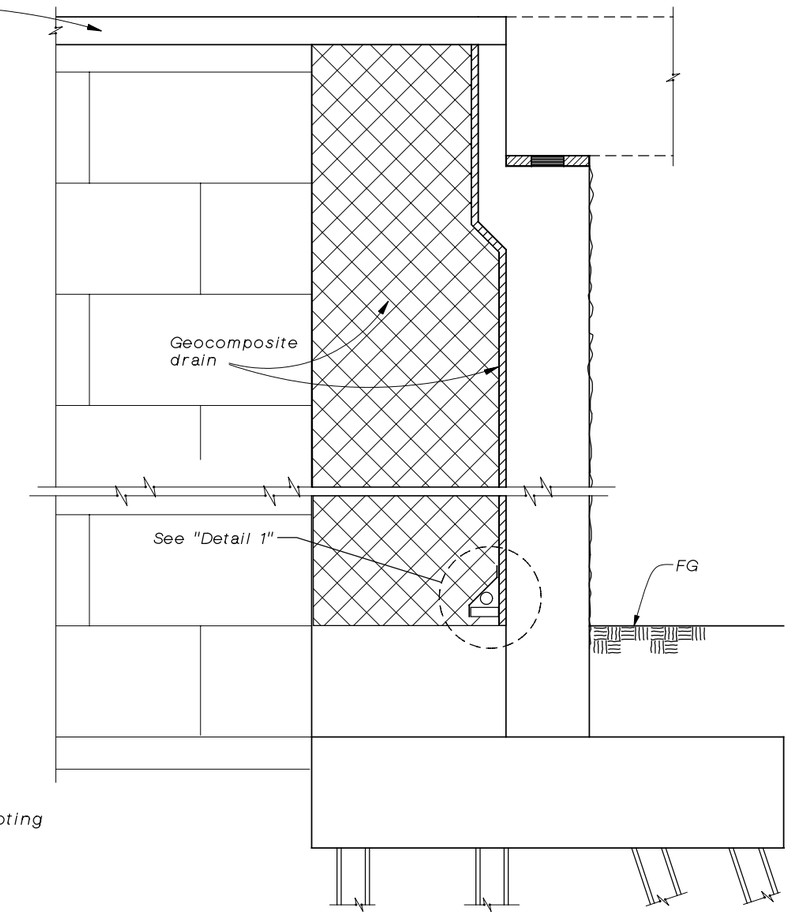

SECTION A-A

No Scale

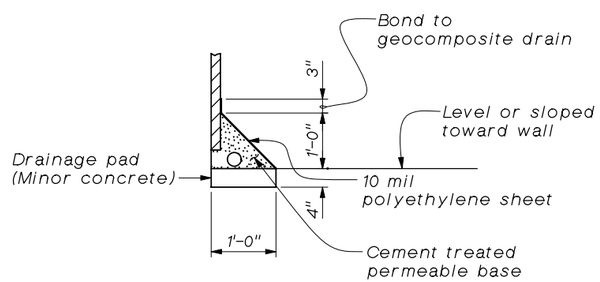

DETAIL 1

WEEP HOLE AND GEOCOMPOSITE DRAIN

No Scale

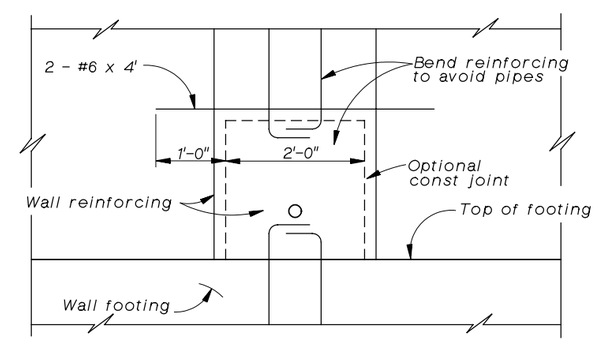

SECTION H-H

No Scale

100% SUBMITTAL
NOT FOR CONSTRUCTION
March 16, 2006

Note:
The Contractor shall verify all controlling field dimensions before ordering or fabricating any material.

Underground Service Alert
Call: TOLL FREE
1-800
422-4133
TWO WORKING DAYS BEFORE YOU DIG

REGISTERED PROFESSIONAL ENGINEER M. CHAR C-057894 EXP. 6-30-06 CIVIL STATE OF CALIFORNIA

LAN LIM & NASCIMENTO ENG. CORP.
1887 BUSINESS CENTER DR. SUITE 6
SAN BERNARDINO, CA 92408

M. CHAR R.C.E. 057894
MY LICENSE EXPIRES 6-30-06
3-15-06
DATE

LAN ENG JOB NO. COFM0202

MARK	REVISIONS	BY	APPR.	DATE

APPROVED _____ 2006
MICHAEL HUDSON, CITY OF MONT CLAIR REDEVELOPMENT/PUBLIC WORKS DEPARTMENT
REGISTERED CIVIL ENGINEER NO. _____
MY LICENSE EXPIRES _____
DRAWN BY: R. ANDRASEK
CHECKED BY: U. SANDIRASEGARAM
RECOMMENDED BY: M. CHAR

CITY OF MONTCLAIR
REDEVELOPMENT/PUBLIC WORKS DEPARTMENT
MONTE VISTA AVENUE
GRADE SEPARATION
STRUCTURE APPROACH
DRAINAGE DETAILS

CITY FILE NO ---------
DRAWING NO 18 OF 21
SHEET 59 OF 82 SHEETS

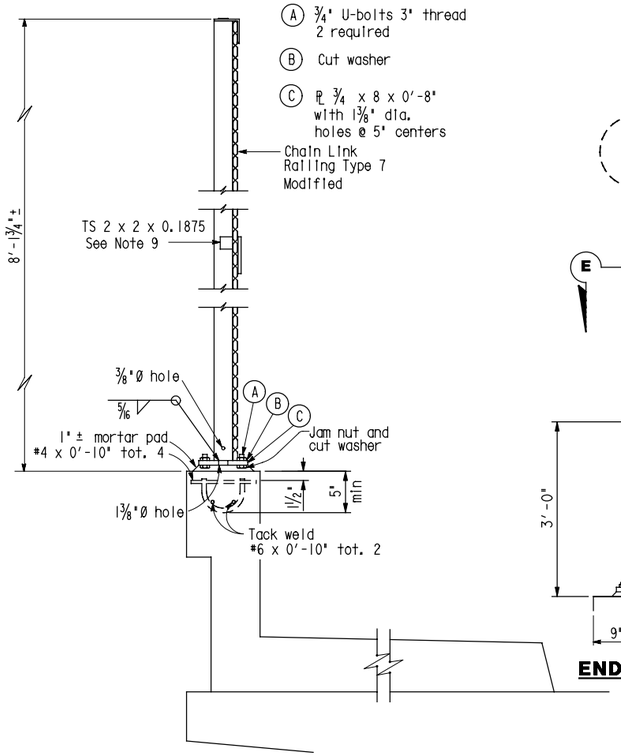

TYPICAL POST DETAIL

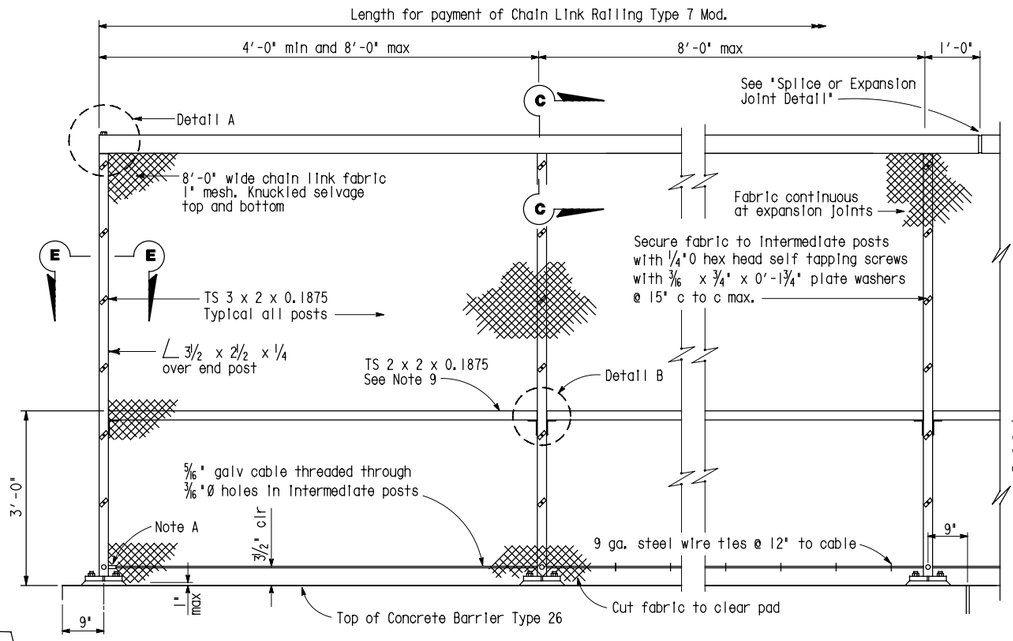

END POST

ELEVATION

Note A: Anchor 5/16" galvanized cable at end post with 1/2" Ø stud socket assembly or 1/2"Ø welded eyebolt and crimped sleeve clamp. Provide 1 1/2" min. take-up at each anchorage.

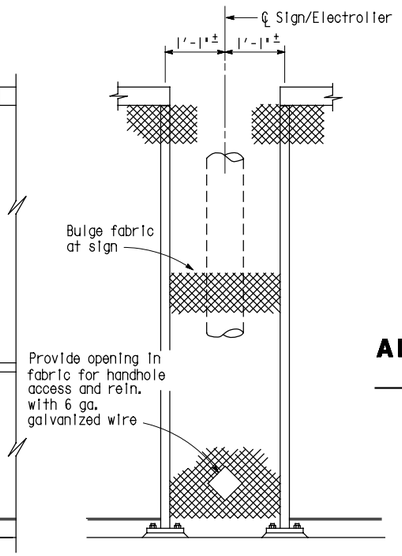

SIGN/ELECTROLIER PANEL

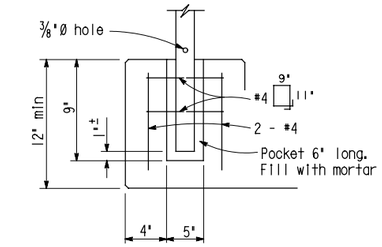

ALTERNATIVE ANCHORAGE DETAIL

May be used when thickness of concrete is 12" or more. Not to be used when post contains electrical conduit.

DECK OR WALL JOINT

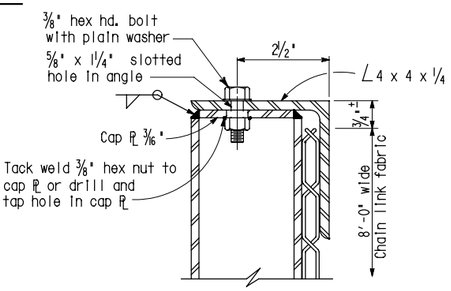

SECTION C-C

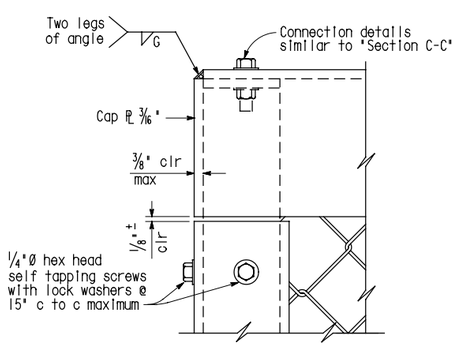

DETAIL A

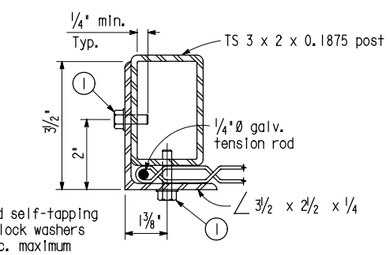

SECTION E-E

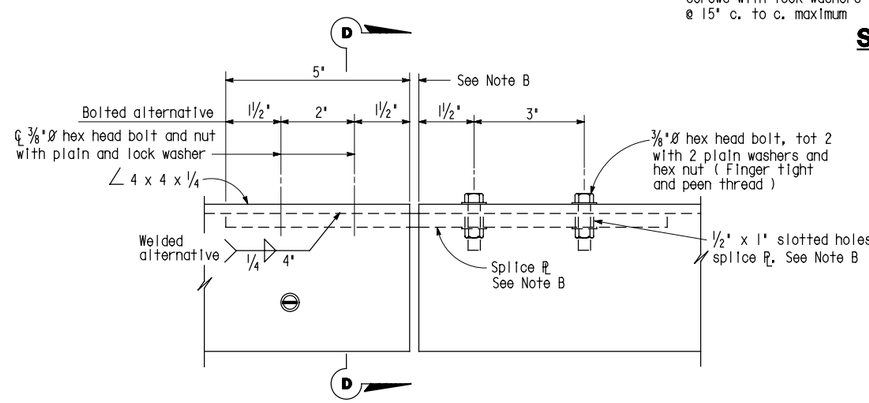

SPLICE OR EXPANSION JOINT DETAIL

Note B: Expansion joint same dimension as expansion in deck or wall. Increase slotted hole length and splice PL length correspondingly.

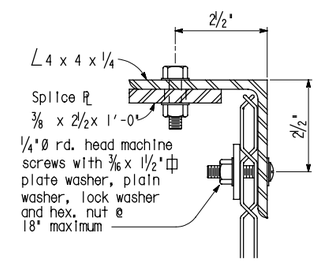

SECTION D-D

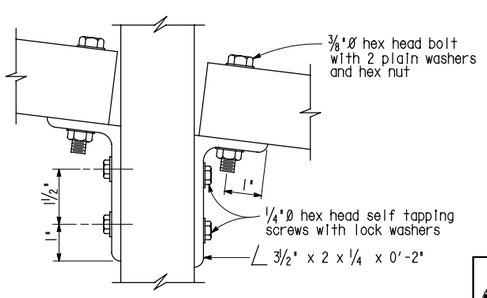

DETAIL B

Note:
The Contractor shall verify all controlling field dimensions before ordering or fabricating any material.

NOTES:

1. Railing assembly except chain link fabric to be galvanized after fabrication.
2. Railing shall conform to horizontal and vertical alignment. Post shall be vertical. Horizontal angle shall be bent to conform to horizontal alignment if radius is 150' or less.
3. Horizontal angle shall be continuous over not less than two intermediate posts, except that a shorter length is permitted at expansion joints and other rail discontinuities.
4. When railing is placed on curved horizontal alignment with radius of 150' or less, drill 1/2" x 3" deep hole in slab and set in epoxy adhesives 3/8"Ø welded eyebolt for 5/16" cable to limit the midordinate distance between the 5/16" cable and curve to be 1" max.
5. Place fabric parallel to slope.
6. Alternative details may be submitted by the Contractor for Engineer's approval.
7. Provide thimbles at all cable loops.
8. Peen all exposed bolts.
9. TS 2 x 2 x 0.1875 required for curves with radius of 150' or less. Bend to conform to curve.

100% SUBMITTAL NOT FOR CONSTRUCTION
March 16, 2006

Underground Service Alert
Call: TOLL FREE 1-800 422-4133
TWO WORKING DAYS BEFORE YOU DIG

REGISTERED PROFESSIONAL ENGINEER M. CHAR C-057894 EXP. 6-30-06 CIVIL STATE OF CALIFORNIA

LAN
LIM & NASCIMENTO ENG. CORP.
1887 BUSINESS CENTER DR. SUITE 6
SAN BERNARDINO, CA 92408

M. Char
M. CHAR R.C.E. 057894
MY LICENSE EXPIRES 6-30-06
3-15-06
DATE

LAN ENG JOB NO. COFM0202

MARK	REVISIONS	BY	APPR.	DATE

APPROVED _____ 2006
MICHAEL HUDSON, CITY OF MONT CLAIR REDEVELOPMENT/PUBLIC WORKS DEPARTMENT
REGISTERED CIVIL ENGINEER NO. _____
MY LICENSE EXPIRES
DRAWN BY: R. ANDRASEK
CHECKED BY: U. SANDIRASEGARAM
RECOMMENDED BY: M. CHAR

CITY OF MONTCLAIR
REDEVELOPMENT/PUBLIC WORKS DEPARTMENT
MONTE VISTA AVENUE GRADE SEPARATION
CHAIN LINK RAILING TYPE 7 MODIFIED

CITY FILE NO ---
DRAWING NO 19 OF 21
SHEET 60 OF 82 SHEETS

Notes:

(1) 1.4-inch samples were taken using a SPT sampler with an inside diameter (I.D.) of 1.4" and an outside diameter (O.D.) of 2".

(2) 2.4-inch samples were taken using a California sampler with an inside diameter (I.D.) of 2.4" and an outside diameter (O.D.) of 3".

(3) Both samplers were driven using a 140-pound automatic trip hammer falling a distance of 30 inches.

PLAN

1" = 30'

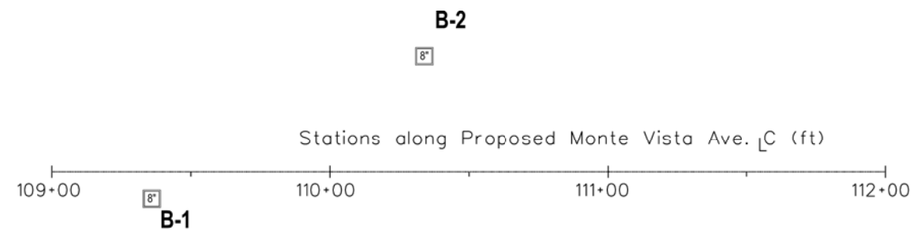

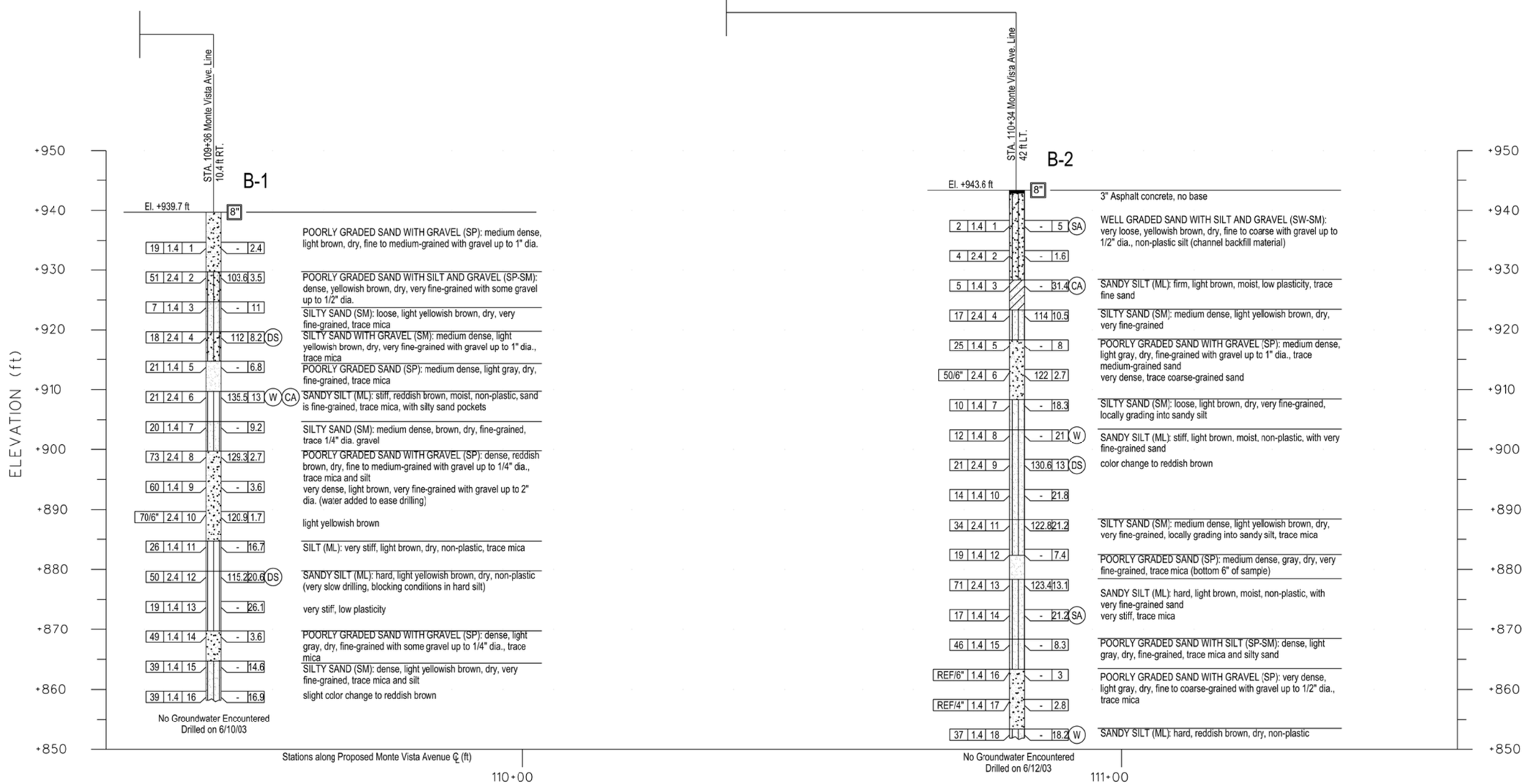

PROFILE

VERTICAL 1" = 10'

HORIZONTAL 1" = 10'

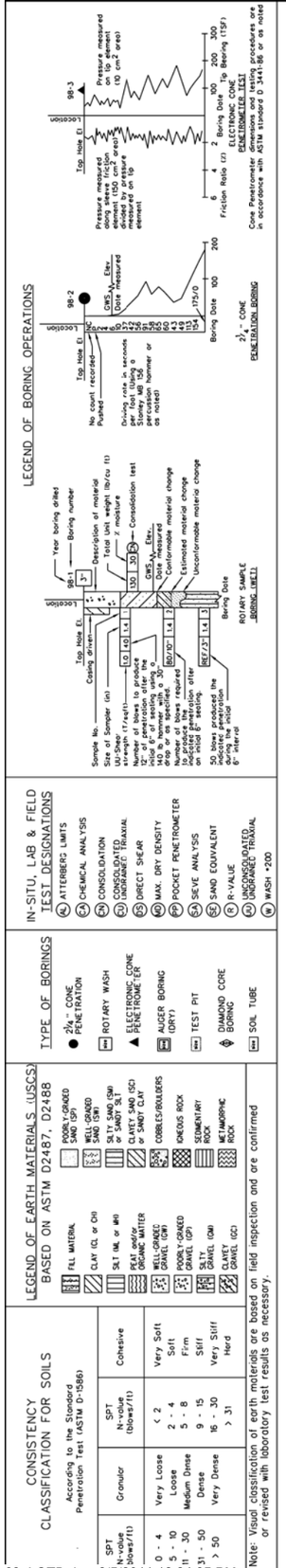

Underground Service Alert
Call TOLL FREE 1-800 422-4133
TWO WORKING DAYS BEFORE YOU DIG

REGISTERED PROFESSIONAL ENGINEER L. CHEANG NO. GE 2345 EXP. 9-30-05 GEOTECHNICAL STATE OF CALIFORNIA

Earth Mechanics, Inc.
Geotechnical and Earthquake Engineering
17660 Newhope Street, Suite E
Fountain Valley, California 92708

REVIEWED BY: Lino Cheang
L. CHEANG RGE #2345 DATE: 2-26-04

MARK	REVISIONS	BY	APPR.	DATE

APPROVED _____ 2006
MICHAEL HUDSON, CITY OF MONTCLAIR DEVELOPMENT SERVICES DEPARTMENT-PUBLIC WORKS/ENGINEERING
REGISTERED CIVIL ENGINEER NO. _____
MY LICENSE EXPIRES _____
DRAWN BY: S. SICILIANO
CHECKED BY: L. YAN
RECOMMENDED BY:

CITY OF MONTCLAIR
DEVELOPMENT SERVICES DEPARTMENT
MONTE VISTA AVENUE GRADE SEPARATION
LOG OF TEST BORINGS B-1, B-2

CITY FILE NO --------
DRAWING NO -----
SHEET 63 OF 82 SHEETS

Notes:

(1) 1.4-inch samples were taken using a SPT sampler with an inside diameter (I.D.) of 1.4" and an outside diameter (O.D.) of 2".

(2) 2.4-inch samples were taken using a California sampler with an inside diameter (I.D.) of 2.4" and an outside diameter (O.D.) of 3".

(3) Both samplers were driven using a 140-pound automatic trip hammer falling a distance of 30 inches.

PLAN

1"=30'

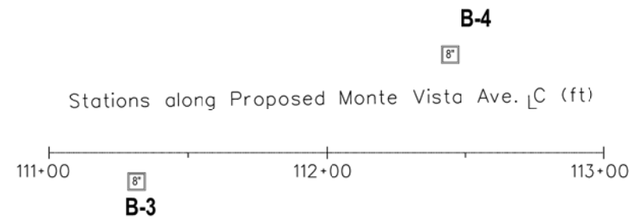

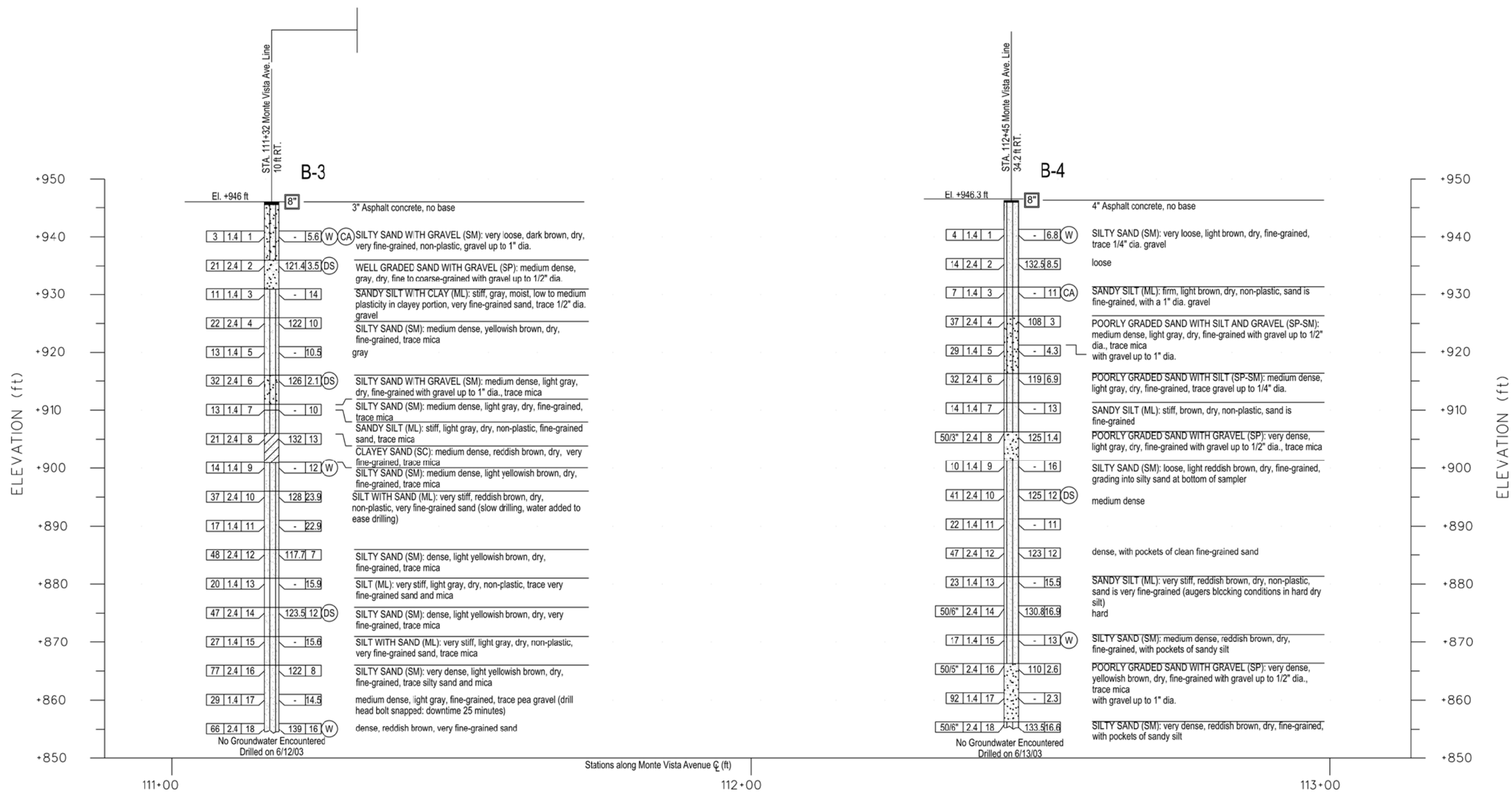

PROFILE

VERTICAL 1"=10'

HORIZONTAL 1"=10'

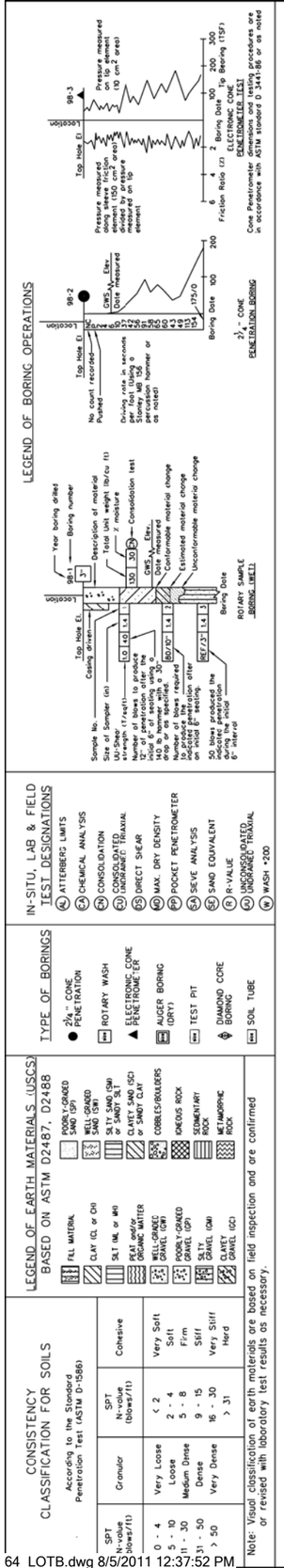

Underground Service Alert — Call TOLL FREE 1-800 422-4133 — TWO WORKING DAYS BEFORE YOU DIG

REGISTERED PROFESSIONAL ENGINEER — L. CHEANG — NO. GE 2345 — EXP. 9-30-05 — GEOTECHNICAL — STATE OF CALIFORNIA

Earth Mechanics, Inc.
Geotechnical and Earthquake Engineering
17660 Newhope Street, Suite E
Fountain Valley, California 92708

REVIEWED BY: Lino Cheang DATE: 2-26-04
L. CHEANG RGE #2345

MARK	REVISIONS	BY	APPR.	DATE

APPROVED _____ 2006
MICHAEL HUDSON, CITY OF MONTCLAIR
DEVELOPMENT SERVICES DEPARTMENT-PUBLIC WORKS/ENGINEERING
REGISTERED CIVIL ENGINEER NO. _____
MY LICENSE EXPIRES _____
DRAWN BY: S. SICILIANO
CHECKED BY: L. YAN
RECOMMENDED BY:

CITY OF MONTCLAIR
DEVELOPMENT SERVICES DEPARTMENT
MONTE VISTA AVENUE GRADE SEPARATION
LOG OF TEST BORINGS B-3, B-4

CITY FILE NO -------
DRAWING NO -----
SHEET 64 OF 82 SHEETS

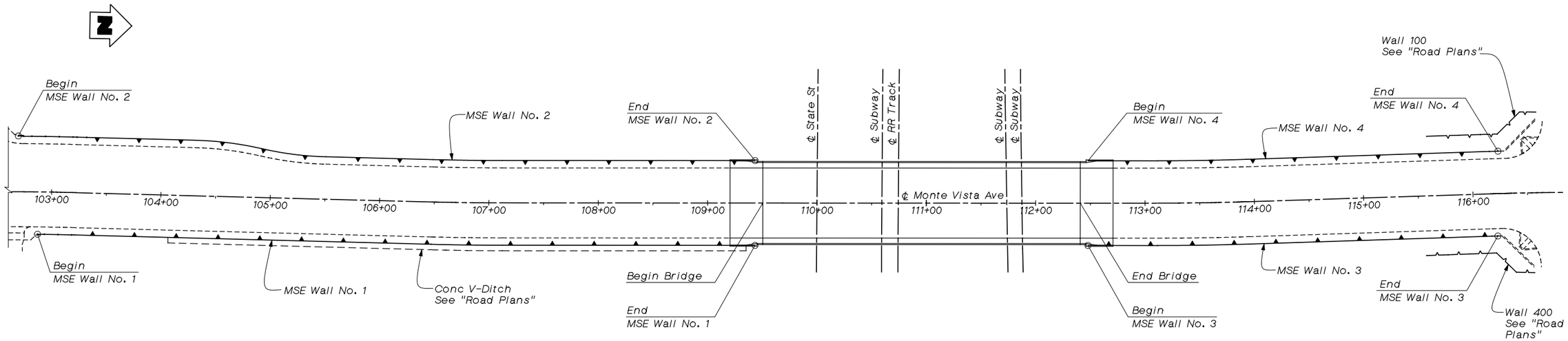

KEY PLAN

No Scale

INDEX TO PLANS

SHEET No.	TITLE
1.	MSE WALL - KEY PLAN & NOTES
2.	MSE WALL No. 1 - PLAN & ELEVATION
3.	MSE WALL No. 2 - PLAN & ELEVATION 1
4.	MSE WALL No. 2 - PLAN & ELEVATION 2
5.	MSE WALL No. 3 - PLAN & ELEVATION
6.	MSE WALL No. 4 - PLAN & ELEVATION
7.	MSE WALL TYPICAL SECTION
8.	MSE DETAILS No. 1
9.	MSE DETAILS No. 2
10.	MSE DETAILS No. 3
11.	MSE DETAILS No. 4
12.	MSE DETAILS No. 5
13.	MSE DETAILS No. 7
14.	MSE DETAILS No. 9
15.	LOG OF TEST BORINGS B-5, B-9, B-11
16.	LOG OF TEST BORINGS B-6, B-10, B-12
17.	LOG OF TEST BORINGS B-7, B-8, B-13
18.	LOG OF TEST BORINGS B-14, B-15, B-16

STANDARD PLANS FOR CONSTRUCTION OF LOCAL STREETS & ROADS, DATED JULY 2002

A10A	ABBREVIATIONS AND ACRONYMS
A10B	SYMBOLS
B11-52	CHAIN LINK RAILING TYPE 7
B11-54	CONCRETE BARRIER TYPE 26

Standard Plan Sheet No.

Detail No.

ESTIMATED QUANTITIES

ITEM	QTY
Earth Retaining System (MSE Wall)	44,223 ft^2
Chain Link Railing Type 7	2,000 ft
Concrete Barrier Type 26 (mod)	2,000 ft

NOTES

1. For General Notes, see "Mechanically Stabilized Embankment Details No. 4" sheet.
2. For MSE wall elevations & Typical Section, see "MSE Wall Typical Section" sheet.
3. Letter designations on face of panels indicates wire mat schedule shown on "MSE Wall Typical Section" sheet.
4. (A) indicates location of inspection wires. See "Mechanically Stabilized Embankment Details No. 9" sheet.
5. Architectural treatment is required on all MSE Wall Panels. For fractured fin treatment pattern, see "MSE Details No. 3" sheet. Architectural treatment details not shown on Elevation & Sections for clarity.

100% SUBMITTAL
NOT FOR CONSTRUCTION
March 16, 2006

Note:
The Contractor shall verify all controlling field dimensions before ordering or fabricating any material.

Underground Service Alert
Call: TOLL FREE 1-800 422-4133
TWO WORKING DAYS BEFORE YOU DIG

REGISTERED PROFESSIONAL ENGINEER M. CHAR C-057894 EXP. 6-30-06 CIVIL STATE OF CALIFORNIA

LAN
LIM & NASCIMENTO ENG. CORP.
1887 BUSINESS CENTER DR. SUITE 6
SAN BERNARDINO, CA 92408

M. CHAR R.C.E. 057894
MY LICENSE EXPIRES 6-30-06
3-15-06
DATE

LAN ENG JOB NO. COFM0202

MARK	REVISIONS	BY	APPR.	DATE

APPROVED _____ 2006
MICHAEL HUDSON, CITY OF MONT CLAIR
REDEVELOPMENT/PUBLIC WORKS DEPARTMENT
REGISTERED CIVIL ENGINEER NO. _____
MY LICENSE EXPIRES _____

DRAWN BY: R. ANDRASEK
CHECKED BY: U. SANDIRASEGARAM
RECOMMENDED BY: M. CHAR

CITY OF MONTCLAIR
REDEVELOPMENT/PUBLIC WORKS DEPARTMENT
MONTE VISTA AVENUE
GRADE SEPARATION
MSE WALL
KEY PLAN & NOTES

CITY FILE NO

DRAWING NO
1 OF 18
SHEET 65 OF 82 SHEETS

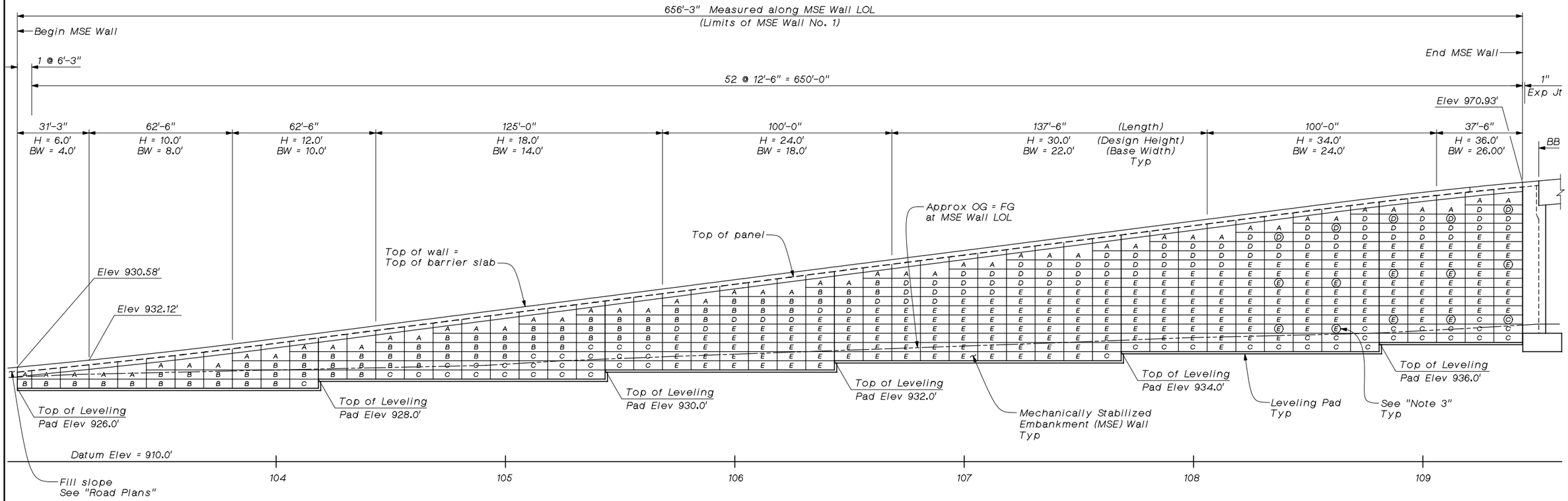

DEVELOPED ELEVATION

Horiz: 1"=20'
Vert: 1"=10'

CURVE DATA

(A)	(B)
R = 2538.75'	R = 2461.25'
Δ = 1°26'45"	Δ = 0°47'19"
T = 32.53'	T = 16.94'
L = 64.06'	L = 33.87'

Notes:

1. Concrete Barrier & Chain Link Railing not shown.
2. A, B, C, D & E indicate earth reinforcement identification. For Welded Wire Mat Schedule, see "MSE Wall Typical Section" sheet.
3. Wall panel with circled reinforcement ID indicates location of inspection wire placement. See "MSE Details No. 9" sheet for details.

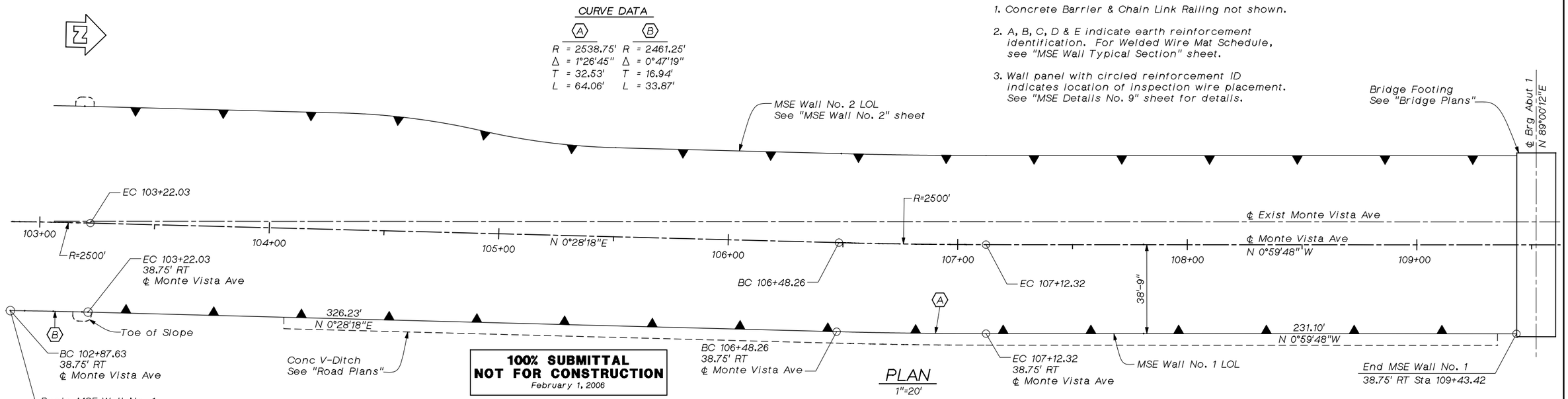

PLAN

1"=20'

100% SUBMITTAL
NOT FOR CONSTRUCTION
February 1, 2006

Note:
The Contractor shall verify all controlling field dimensions before ordering or fabricating any material.

Underground Service Alert
Call: TOLL FREE 1-800 422-4133
TWO WORKING DAYS BEFORE YOU DIG

REGISTERED PROFESSIONAL ENGINEER M. CHAR C-057894 EXP. 6-30-06 CIVIL STATE OF CALIFORNIA

LAN
LIM & NASCIMENTO ENG. CORP.
1887 BUSINESS CENTER DR. SUITE 6
SAN BERNARDINO, CA 92408

M. CHAR R.C.E. 057894
MY LICENSE EXPIRES 6-30-06
3-16-06
DATE

LAN ENG JOB NO. COFM0202

MARK	REVISIONS	BY	APPR.	DATE

APPROVED _____ 2006
MICHAEL HUDSON, CITY OF MONT CLAIR
REDEVELOPMENT/PUBLIC WORKS DEPARTMENT
REGISTERED CIVIL ENGINEER NO. _____
MY LICENSE EXPIRES _____
DRAWN BY: R. ANDRASEK
CHECKED BY: U. SANDIRASEGARAM
RECOMMENDED BY: M. CHAR

CITY OF MONTCLAIR
REDEVELOPMENT/PUBLIC WORKS DEPARTMENT
MONTE VISTA AVENUE
GRADE SEPARATION
MSE WALL No. 1
PLAN & ELEVATION

CITY FILE NO ---
DRAWING NO 2 OF 18
SHEET 66 OF 82 SHEETS

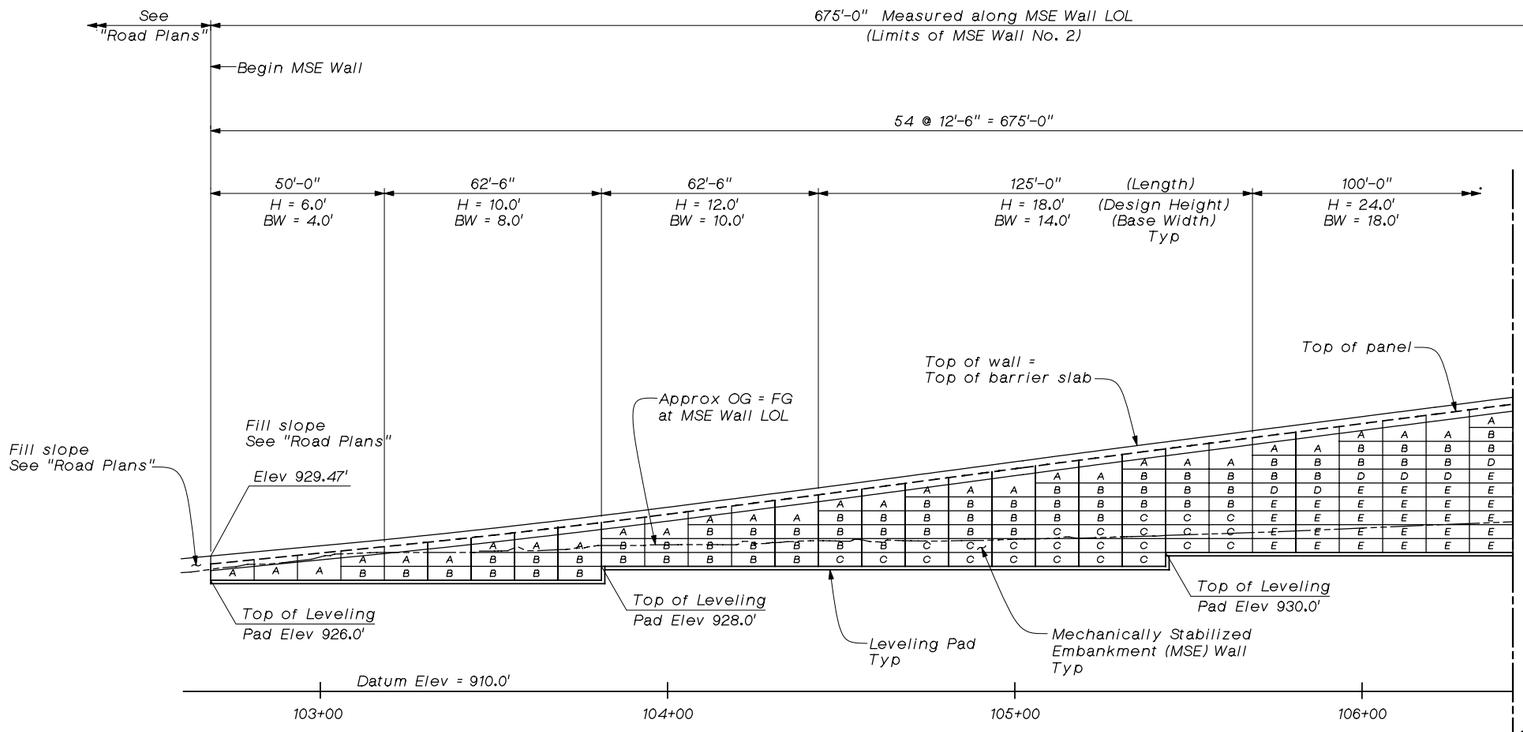

PART DEVELOPED ELEVATION

Horiz: 1"=20'
Vert: 1"=10'

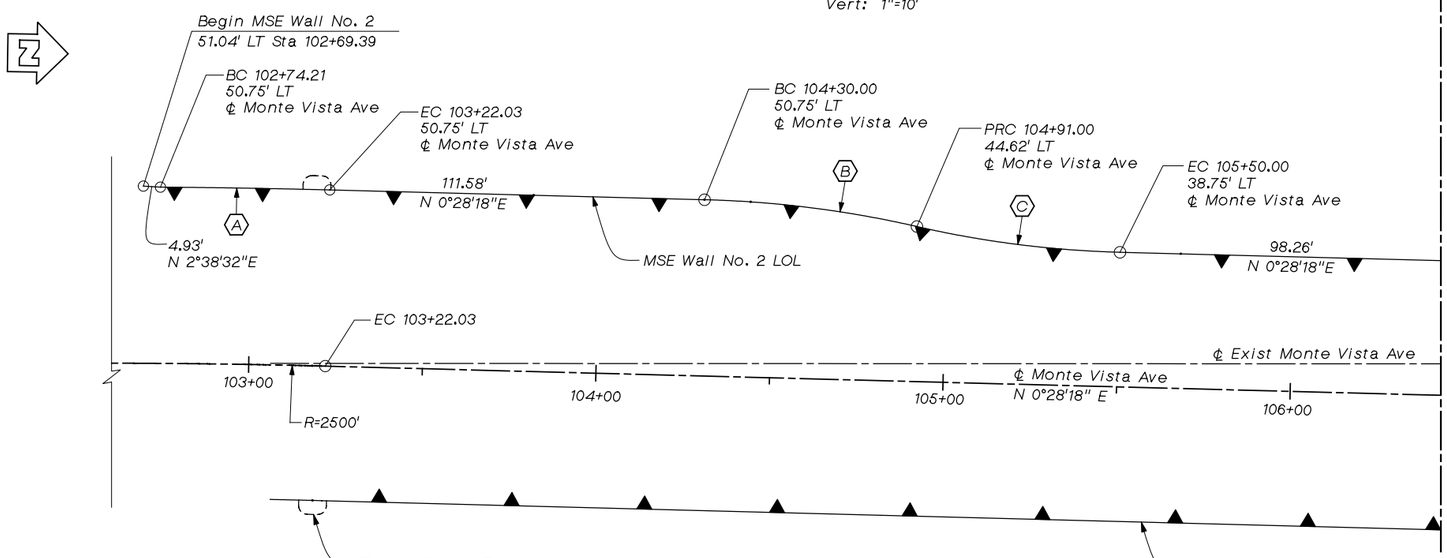

PART PLAN

1"=20'

MATCH LINE - STA 106+43.43
See "MSE WALL No. 2 PLAN & ELEVATION 2" sheet

Notes:

1. Concrete Barrier & Chain Link Railing not shown.
2. A, B, C, D & E indicate earth reinforcement identification. For Welded Wire Mat Schedule, see "MSE Wall Typical Section" sheet.
3. Wall panel with circled reinforcement ID indicates location of inspection wire placement. See "MSE Details No. 9" sheet for details.

CURVE DATA

A	B	C
R = 2550.75'	R = 309.75'	R = 296.25'
Δ = 1°05'46"	Δ = 11°17'00"	Δ = 11°24'79"
T = 24.40'	T = 30.97'	T = 29.62'
L = 48.79'	L = 61.00'	L = 59.00'

100% SUBMITTAL
NOT FOR CONSTRUCTION
March 16, 2006

Note:
The Contractor shall verify all controlling field dimensions before ordering or fabricating any material.

Underground Service Alert
Call: TOLL FREE
1-800
422-4133
TWO WORKING DAYS BEFORE YOU DIG

PROFESSIONAL ENGINEER
M. CHAR
C-057894
EXP. 6-30-06
CIVIL
STATE OF CALIFORNIA
REGISTERED

LAN
LIM & NASCIMENTO ENG. CORP.
1887 BUSINESS CENTER DR. SUITE 6
SAN BERNARDINO, CA 92408

M. CHAR R.C.E. 057894
MY LICENSE EXPIRES 6-30-06
3-15-06
DATE

LAN ENG JOB NO. COFM0202

MARK	REVISIONS	BY	APPR.	DATE

APPROVED _____ 2006
MICHAEL HUDSON, CITY OF MONT CLAIR
REDEVELOPMENT/PUBLIC WORKS DEPARTMENT
REGISTERED CIVIL ENGINEER NO. _____
MY LICENSE EXPIRES _____

DRAWN BY: R. ANDRASEK
CHECKED BY: U. SANDIRASEGARAM
RECOMMENDED BY: M. CHAR

CITY OF MONTCLAIR
REDEVELOPMENT/PUBLIC WORKS DEPARTMENT
MONTE VISTA AVENUE
GRADE SEPARATION
MSE WALL No. 2
PLAN & ELEVATION 1

CITY FILE NO

DRAWING NO
3 OF 18
SHEET 67 OF 82 SHEETS

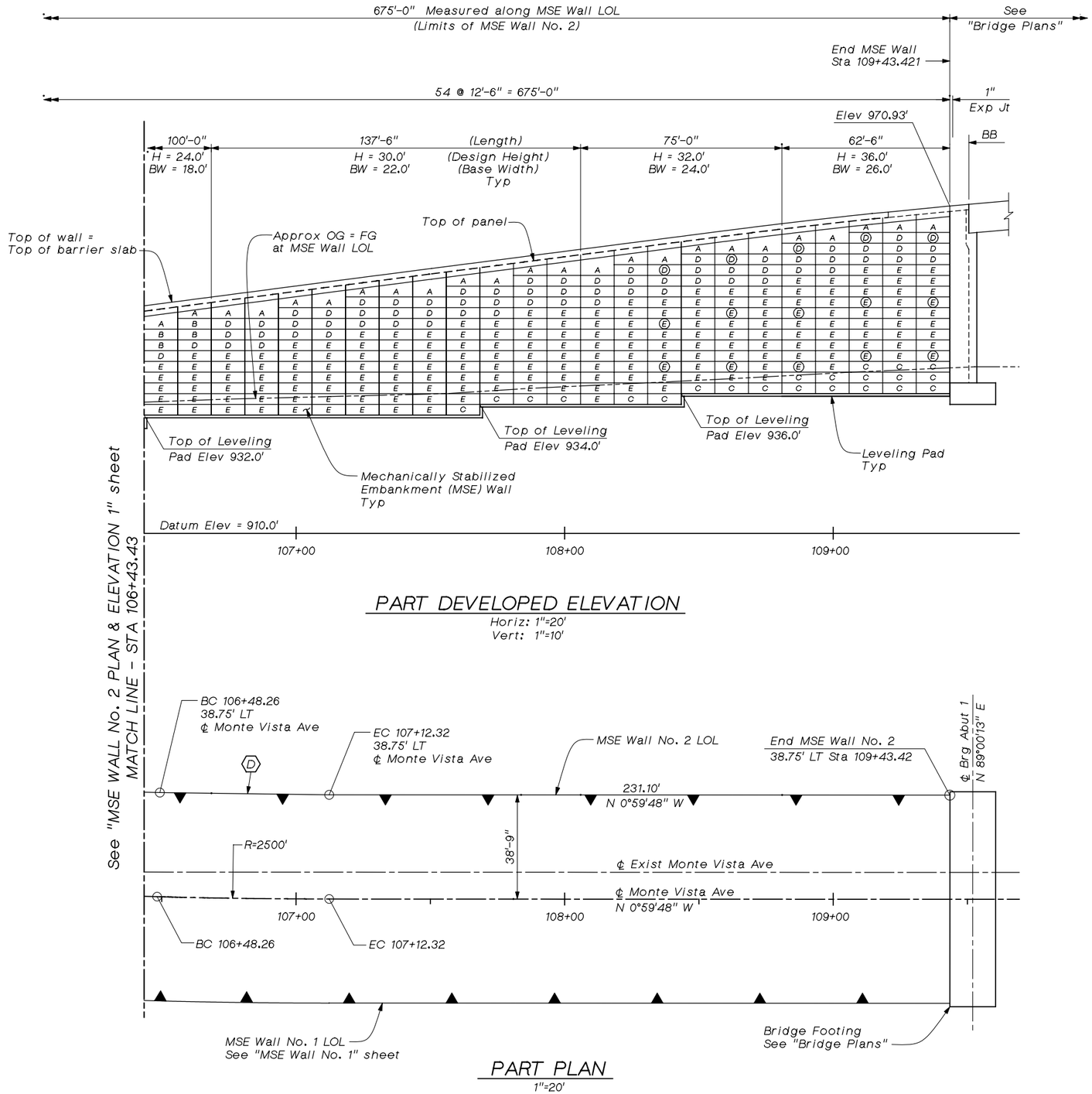

PART DEVELOPED ELEVATION

Horiz: 1"=20'
Vert: 1"=10'

PART PLAN

1"=20'

CURVE DATA

(D)

R = 2461.25'
Δ = 1°29'29"
T = 31.54
L = 64.06'

Notes:

1. Concrete Barrier & Chain Link Railing not shown.
2. A, B, C, D & E indicate earth reinforcement identification. For Welded Wire Mat Schedule, see "MSE Wall Typical Section" sheet.
3. Wall panel with circled reinforcement ID indicates location of inspection wire placement. See "MSE Details No. 9" sheet for details.

100% SUBMITTAL
NOT FOR CONSTRUCTION
March 16, 2006

Note:
The Contractor shall verify all controlling field dimensions before ordering or fabricating any material.

Underground Service Alert
Call: TOLL FREE 1-800 422-4133
TWO WORKING DAYS BEFORE YOU DIG

PROFESSIONAL ENGINEER M. CHAR C-057894 EXP. 6-30-06 CIVIL STATE OF CALIFORNIA

LAN
LIM & NASCIMENTO ENG. CORP.
1887 BUSINESS CENTER DR. SUITE 6
SAN BERNARDINO, CA 92408

M. CHAR R.C.E. 057894
MY LICENSE EXPIRES 6-30-06

3-15-06
DATE

LAN ENG JOB NO. COFM0202

MARK	REVISIONS	BY	APPR.	DATE

APPROVED _____ 2006

MICHAEL HUDSON, CITY OF MONT CLAIR
REDEVELOPMENT/PUBLIC WORKS DEPARTMENT
REGISTERED CIVIL ENGINEER NO. _____
MY LICENSE EXPIRES _____

DRAWN BY: R. ANDRASEK
CHECKED BY: U. SANDIRASEGARAM
RECOMMENDED BY: M. CHAR

CITY OF MONTCLAIR
REDEVELOPMENT/PUBLIC WORKS DEPARTMENT

MONTE VISTA AVENUE
GRADE SEPARATION

MSE WALL No. 2
PLAN & ELEVATION 1

CITY FILE NO

DRAWING NO
4 OF 18

SHEET 68 OF 82 SHEETS

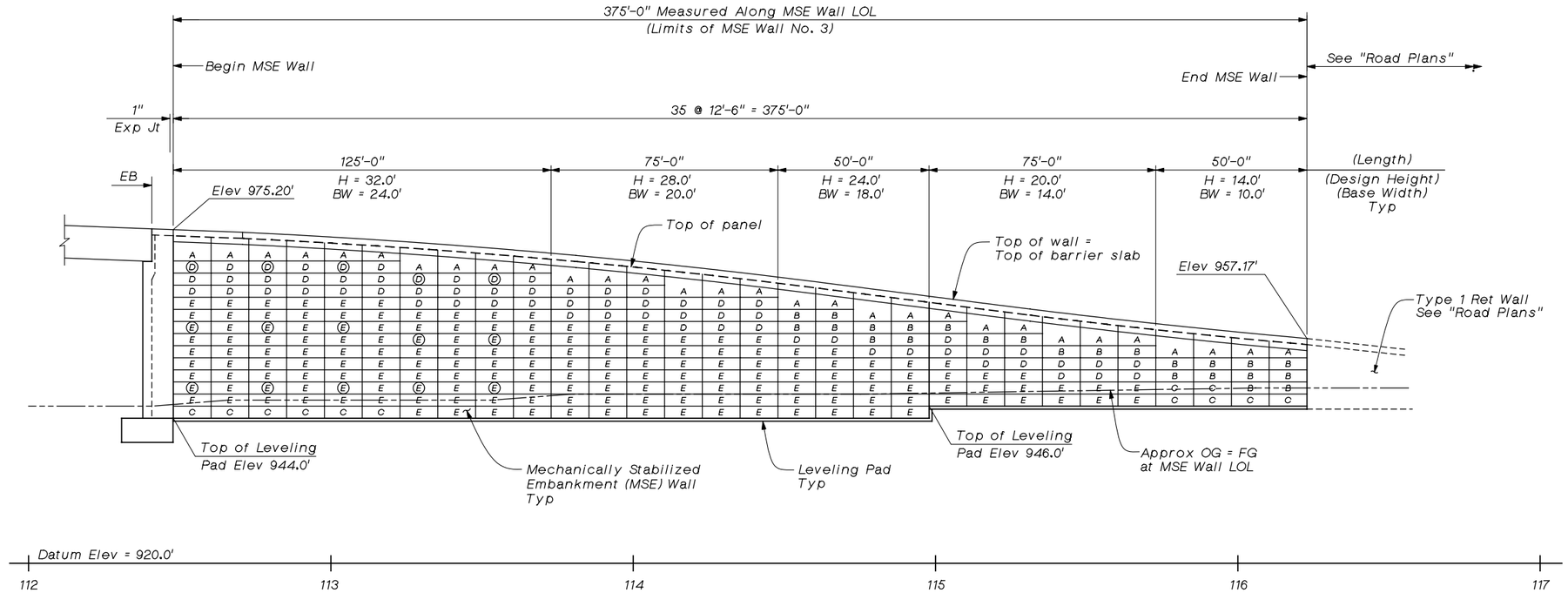

DEVELOPED ELEVATION

Horiz: 1"=20'
Vert: 1"=10'

CURVE DATA

(E)

R = 2538.75'
Δ = 1°51'41"
T = 41.88'
L = 82.48'

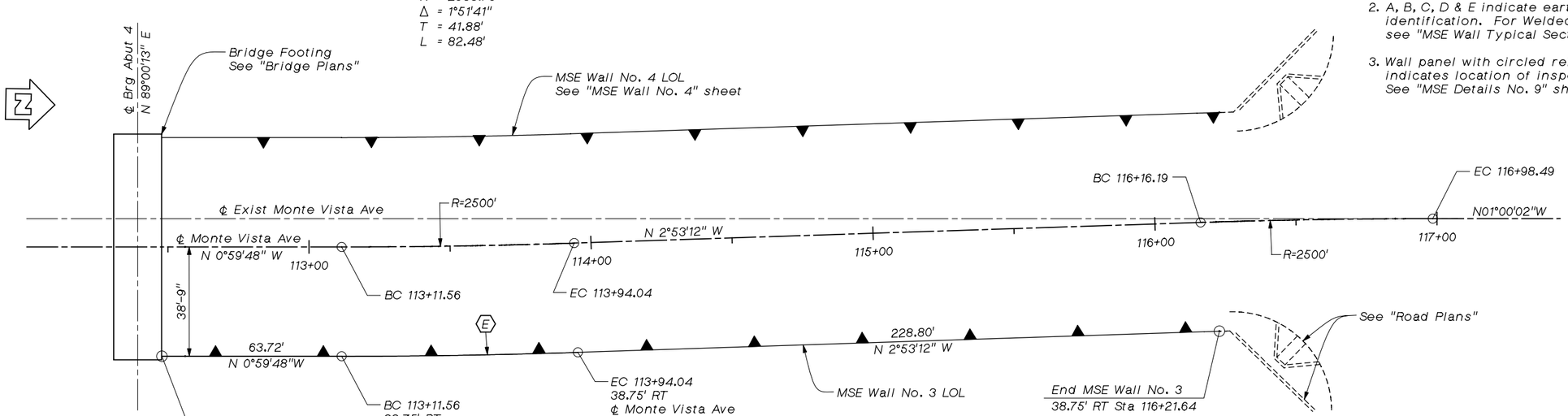

PLAN

1"=20'

Notes:

1. Concrete Barrier & Chain Link Railing not shown.
2. A, B, C, D & E indicate earth reinforcement identification. For Welded Wire Mat Schedule, see "MSE Wall Typical Section" sheet.
3. Wall panel with circled reinforcement ID indicates location of inspection wire placement. See "MSE Details No. 9" sheet for details.

100% SUBMITTAL
NOT FOR CONSTRUCTION
March 16, 2006

Note:
The Contractor shall verify all controlling field dimensions before ordering or fabricating any material.

Underground Service Alert
Call: TOLL FREE
1-800
422-4133
TWO WORKING DAYS BEFORE YOU DIG

REGISTERED PROFESSIONAL ENGINEER
M. CHAR
C-057894
EXP. 6-30-06
CIVIL
STATE OF CALIFORNIA

LAN
LIM & NASCIMENTO ENG. CORP.
1887 BUSINESS CENTER DR. SUITE 6
SAN BERNARDINO, CA 92408

M. CHAR R.C.E. 057894
MY LICENSE EXPIRES 6-30-06
3-15-06
DATE

LAN ENG JOB NO. COFM0202

MARK	REVISIONS	BY	APPR.	DATE

APPROVED _____ 2006
MICHAEL HUDSON, CITY OF MONT CLAIR
REDEVELOPMENT/PUBLIC WORKS DEPARTMENT
REGISTERED CIVIL ENGINEER NO. _____
MY LICENSE EXPIRES _____
DRAWN BY: R. ANDRASEK
CHECKED BY: U. SANDIRASEGARAM
RECOMMENDED BY: M. CHAR

CITY OF MONTCLAIR
REDEVELOPMENT/PUBLIC WORKS DEPARTMENT
MONTE VISTA AVENUE
GRADE SEPARATION
MSE WALL No. 3
PLAN & ELEVATION

CITY FILE NO

DRAWING NO
5 OF 18
SHEET 69 OF 82 SHEETS

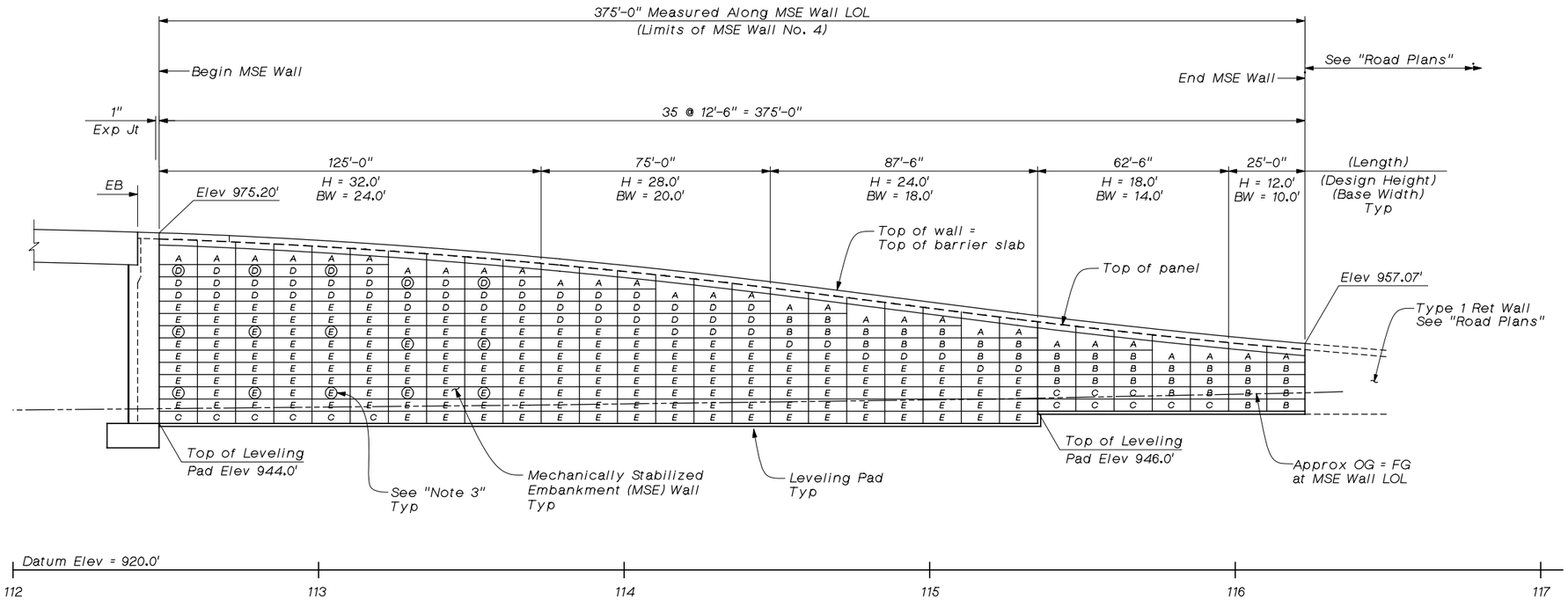

DEVELOPED ELEVATION

Horiz: 1"=20'
Vert: 1"=10'

CURVE DATA

(F)

R = 2461.25'
Δ = 1°55'12"
T = 40.60'
L = 82.48'

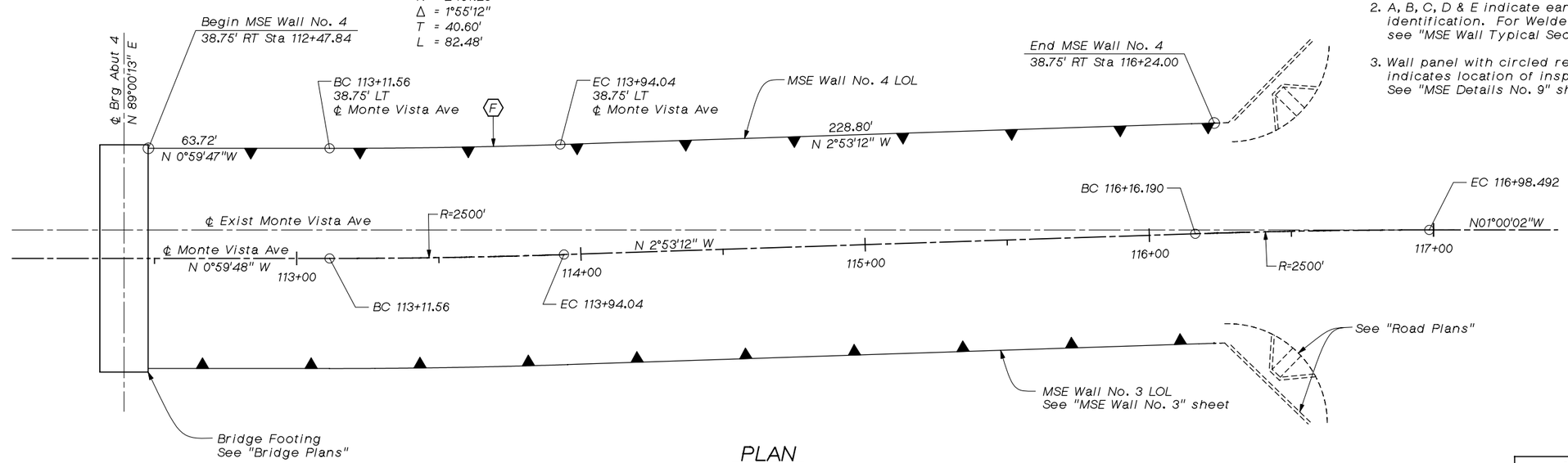

PLAN

1"=20'

Notes:

1. Concrete Barrier & Chain Link Railing not shown.
2. A, B, C, D & E indicate earth reinforcement identification. For Welded Wire Mat Schedule, see "MSE Wall Typical Section" sheet.
3. Wall panel with circled reinforcement ID indicates location of inspection wire placement. See "MSE Details No. 9" sheet for details.

100% SUBMITTAL
NOT FOR CONSTRUCTION
March 16, 2006

Note:
The Contractor shall verify all controlling field dimensions before ordering or fabricating any material.

Underground Service Alert
Call: TOLL FREE 1-800 422-4133
TWO WORKING DAYS BEFORE YOU DIG

REGISTERED PROFESSIONAL ENGINEER M. CHAR C-057894 EXP. 6-30-06 CIVIL STATE OF CALIFORNIA

LAN LIM & NASCIMENTO ENG. CORP.
1887 BUSINESS CENTER DR. SUITE 6
SAN BERNARDINO, CA 92408

M. CHAR R.C.E. 057894
MY LICENSE EXPIRES 6-30-06
3-15-06
DATE

LAN ENG JOB NO. COFM0202

MARK	REVISIONS	BY	APPR.	DATE

APPROVED _____ 2006
MICHAEL HUDSON, CITY OF MONT CLAIR
REDEVELOPMENT/PUBLIC WORKS DEPARTMENT
REGISTERED CIVIL ENGINEER NO. _____
MY LICENSE EXPIRES _____

DRAWN BY: R. ANDRASEK
CHECKED BY: U. SANDIRASEGARAM
RECOMMENDED BY: M. CHAR

CITY OF MONTCLAIR
REDEVELOPMENT/PUBLIC WORKS DEPARTMENT

MONTE VISTA AVENUE
GRADE SEPARATION

MSE WALL No. 4
PLAN & ELEVATION

CITY FILE NO

DRAWING NO
6 OF 18

SHEET 70 OF 82 SHEETS

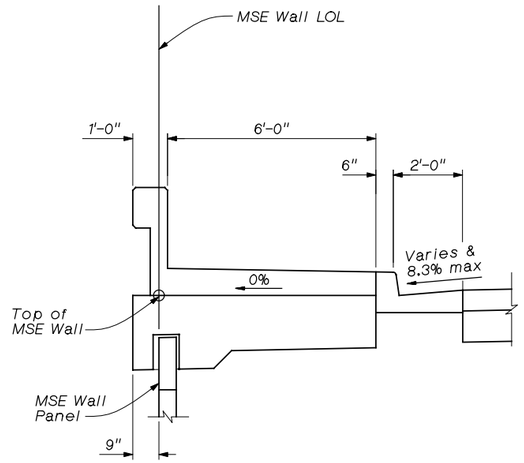

DETAIL A

½" = 1'-0"

MSE Wall LOL Stationing	Top of Wall No. 1 Elevation	Top of Wall No. 2 Elevation
103+18.382	N/A	931.83
103+19.372	932.12	931.88
103+50.000	933.75	933.51
104+00.000	936.75	936.51
104+50.000	939.97	939.74
105+00.000	943.18	943.10
105+50.000	946.40	946.40
106+00.000	949.61	949.61
106+50.000	952.83	952.83
107+00.000	956.04	956.04
107+50.000	959.26	959.26
108+00.000	962.47	962.47
108+50.000	965.69	965.69
109+00.000	968.73	968.73
109+10.504	969.30	969.30
109+20.504	969.80	969.80
109+43.421	970.93	970.93

MSE Wall LOL Stationing	Top of Wall No. 3 Elevation	Top of Wall No. 4 Elevation
112+47.837	975.20	975.20
112+70.754	974.72	974.72
112+80.754	974.50	974.50
113+00.000	973.97	973.97
113+50.000	972.22	972.22
114+00.000	969.95	969.95
114+50.000	967.13	967.13
115+00.000	963.96	963.96
115+50.000	960.83	960.83
116+00.000	958.17	958.17
116+21.643	957.17	957.17
116+23.995	N/A	957.07

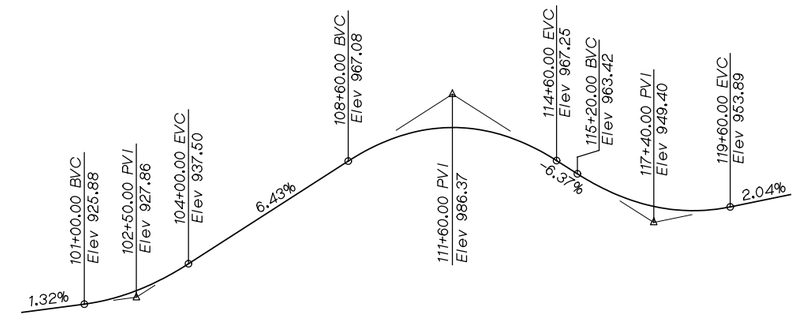

PROFILE GRADE

No Scale

Welded Wire Mat Schedule		
A	6 x W11	12
B	6 x W11	18
C	6 x W11	24
D	4 x W11	18
E	4 x W11	24

LEGEND

6 x W11 12

- 12 — Spacing of transverse wires in mat (inches)
- W11 — Size of longitudinal wire in mat
- 6 — Number of welded wire mats per level for a full length panel of 2'-0" nominal height. For half length panels, use ½ the number of full length panel mats.

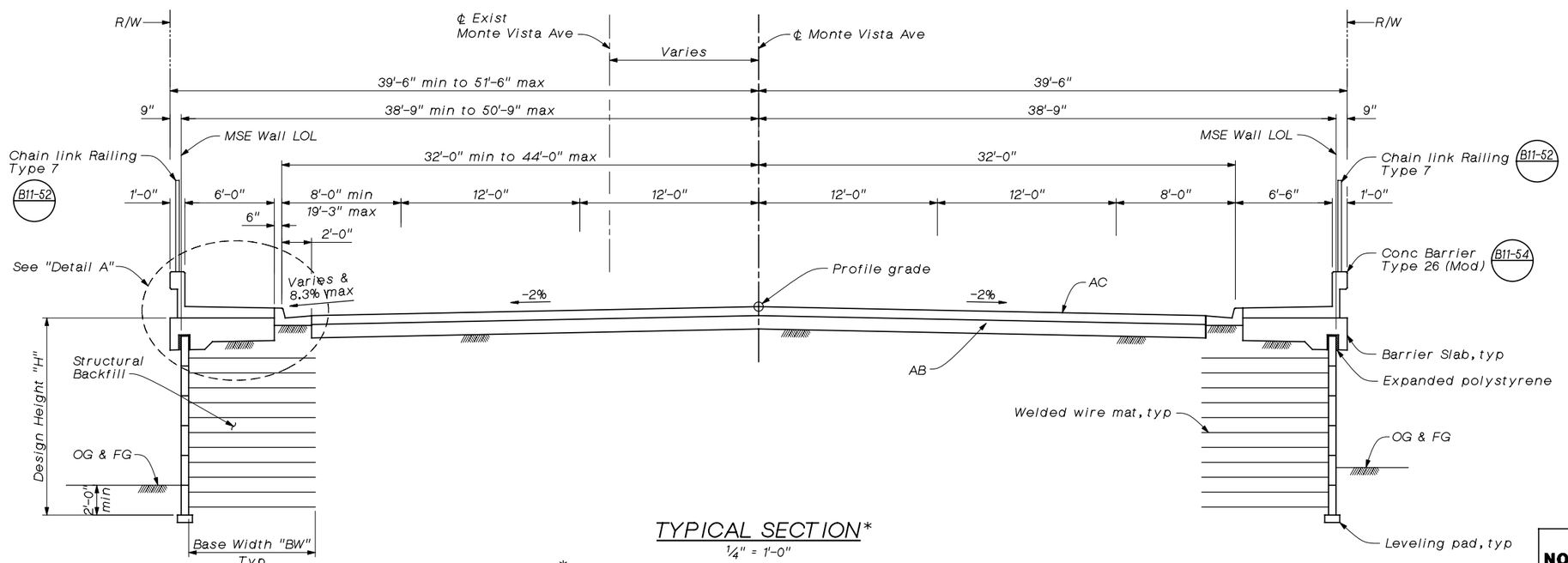

TYPICAL SECTION*

¼" = 1'-0"

*For MSE Wall sections on approach slabs, see Bridge Plans, "Concrete Barrier Type 26 (Modified)" sheet.

100% SUBMITTAL
NOT FOR CONSTRUCTION
March 16, 2006

Note:
The Contractor shall verify all controlling field dimensions before ordering or fabricating any material.

Underground Service Alert
Call: TOLL FREE
1-800
422-4133
TWO WORKING DAYS BEFORE YOU DIG

REGISTERED PROFESSIONAL ENGINEER
M. CHAR
C-057894
EXP. 6-30-06
CIVIL
STATE OF CALIFORNIA

LAN
LIM & NASCIMENTO ENG. CORP.
1887 BUSINESS CENTER DR. SUITE 6
SAN BERNARDINO, CA 92408

M. CHAR R.C.E. 057894
MY LICENSE EXPIRES 6-30-06

3-15-06
DATE

LAN ENG JOB NO. COFM0202

MARK	REVISIONS	BY	APPR.	DATE

APPROVED _____ 2006
MICHAEL HUDSON, CITY OF MONT CLAIR
REDEVELOPMENT/PUBLIC WORKS DEPARTMENT
REGISTERED CIVIL ENGINEER NO. _____
MY LICENSE EXPIRES _____

DRAWN BY: R. ANDRASEK
CHECKED BY: U. SANDIRASEGARAM
RECOMMENDED BY: M. CHAR

CITY OF MONTCLAIR
REDEVELOPMENT/PUBLIC WORKS DEPARTMENT

MONTE VISTA AVENUE
GRADE SEPARATION

MSE WALL
TYPICAL SECTION

CITY FILE NO

DRAWING NO
7 OF 18

SHEET 71 OF 82 SHEETS

DIST.	COUNTY	ROUTE	POST MILES TOTAL PROJECT	SHEET NO.	TOTAL SHEETS
				72	82

REGISTERED ENGINEER - CIVIL

REGISTERED PROFESSIONAL ENGINEER MOHAN S. CHAR No. C-057894 Exp. 6-06 CIVIL STATE OF CALIFORNIA

PLANS APPROVAL DATE

The State of California or its officers or agents shall not be responsible for the accuracy or completeness of electronic copies of this plan sheet.

100% SUBMITTAL
NOT FOR CONSTRUCTION
March 16, 2006

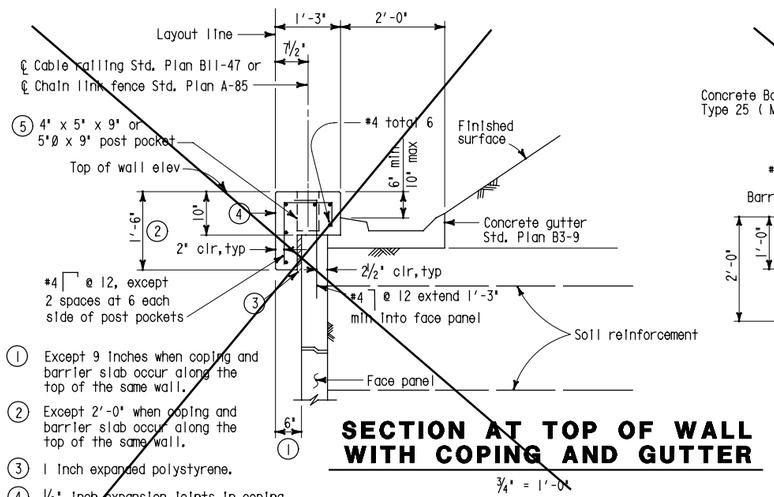

1. Except 9 inches when coping and barrier slab occur along the top of the same wall.
2. Except 2'-0" when coping and barrier slab occur along the top of the same wall.
3. 1 inch expanded polystyrene.
4. ½" inch expansion joints in coping at every fourth panel joint.
5. Locate post pockets a minimum of 2'-0" from expansion joints and ends of coping.

Note A: Install cable railing or chain link fence when indicated in project plans.

SECTION AT TOP OF WALL WITH COPING AND GUTTER

¾" = 1'-0"

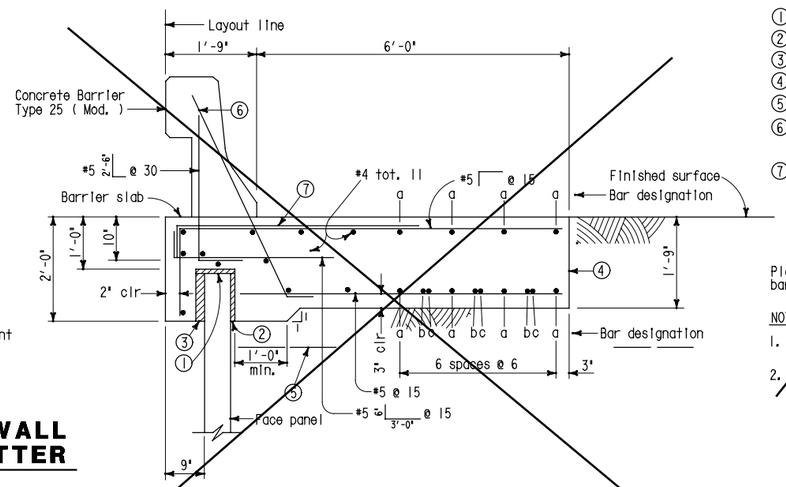

SECTION AT TOP OF WALL WITH

¾" = 1'-0"

1. 1" Expanded polystyrene
2. 1" Expanded polystyrene
3. 2" Expanded polystyrene
4. Contact joint
5. Soil reinforcement
6. #5 @ 15, except 4 spaces @ 7½ at ends of wall
7. #5 @ 15, bundled with #5 @15

'a' bar = #6 continuous
'b' bar = #6 x 60'-0"
'c' bar = #6 x 50'-0"

Place 'b' and 'c' bars at beginning and ending ends of barrier slab.

NOTES:

1. Clearance to reinforcing steel in concrete barrier to be 1".
2. No expansion joints in barrier or barrier slab within limits of wall.

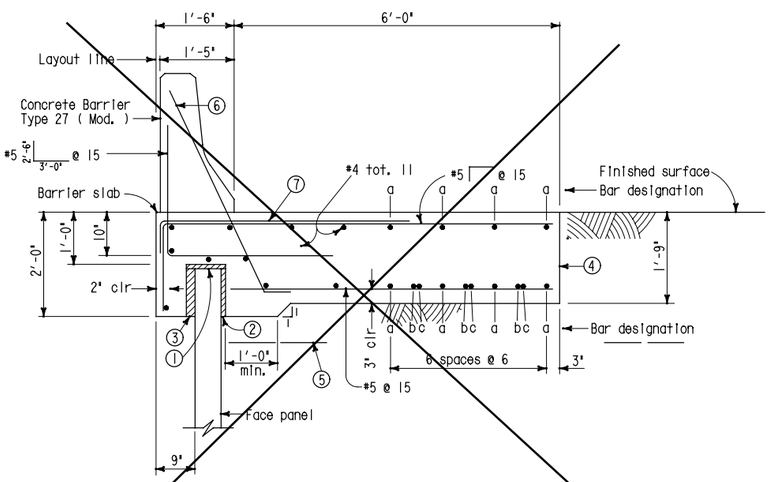

SECTION AT TOP OF WALL WITH CONCRETE BARRIER TYPE 27 (MOD)

¾" = 1'-0"

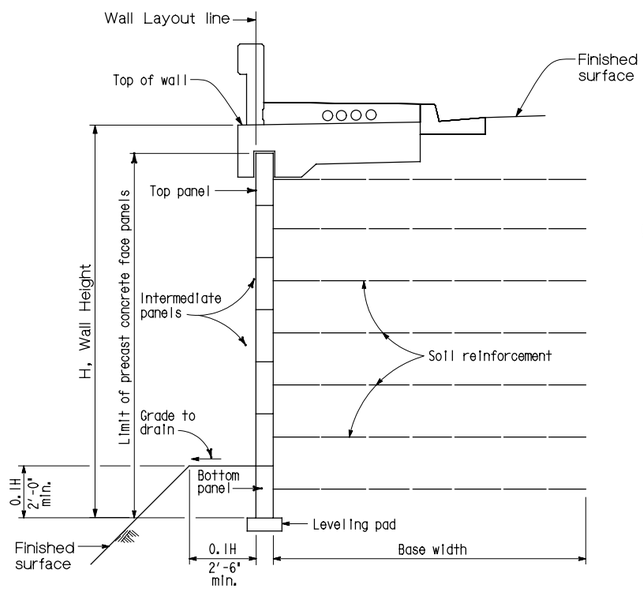

WALL SECTION WITH COPING AND GUTTER

⅜" = 1'-0"

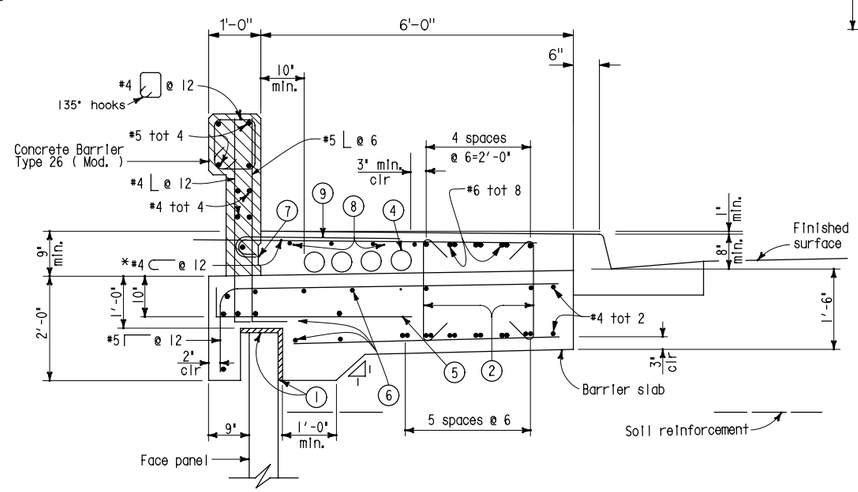

SECTION AT TOP OF WALL WITH CONCRETE BARRIER TYPE 26 (MOD)

¾" = 1'-0"

NOTES FOR CONCRETE BARRIER TYPE 26 (MOD)

1. 1" Expanded polystyrene
2. #4 @ 12 135° hooks
3. ~~2" Expanded polystyrene~~
4. Utility openings, 5" inside diameter, minimum 2 openings, maximum 4 openings. Openings are to be sealed at ends if not used. Secure forms for openings to barrier slab.
5. #5 @ 12
6. #4 tot 13
7. Optional construction joint
8. #4 tot 6
9. #4 @ 6 bundle alternate bars with #4 @ 12. Bundle with each #4 @ 6 at ends of wall.

* Except 6 spaces at 6 at ends of wall.

A. Clearance to reinforcing steel in concrete barrier to be 1".

B. No expansion joint in barrier or barrier slab within limits of wall.

Parapet concrete = Structural concrete f'c = 4,000 psi

STANDARD DRAWING				
FILE NO. XS 11-1	DESIGN	BY J.C. MOESE	CHECKED S.D. WIMAN	APPROVAL RECOMMENDED BY
DESIGN DATE 3/98	DETAILS	BY R. YEE	CHECKED S.D. WIMAN	DESIGN SUPERVISOR
	SUBMITTED BY			

STATE OF CALIFORNIA
DEPARTMENT OF TRANSPORTATION

DIVISION OF STRUCTURES
STRUCTURE DESIGN

BRIDGE NO.
POST MILE

MONTE VISTA AVENUE GRADE SEPARATION
MECHANICALLY STABILIZED EMBANKMENT DETAILS NO. 1

DS OSD 2147A (CADD 7/97)

ORIGINAL SCALE IN INCHES FOR REDUCED PLANS 0 1 2 3

CU
EA

DISREGARD PRINTS BEARING EARLIER REVISION DATES

REVISION DATES (PRELIMINARY STAGE ONLY)

SHEET 8 OF 18

RELEASED 3-24-98

DIST.	COUNTY	ROUTE	POST MILES TOTAL PROJECT	SHEET NO.	TOTAL SHEETS
				73	82

REGISTERED ENGINEER - CIVIL

REGISTERED PROFESSIONAL ENGINEER MOHAN S. CHAR No. C-057894 Exp. 6-06 CIVIL STATE OF CALIFORNIA

PLANS APPROVAL DATE

The State of California or its officers or agents shall not be responsible for the accuracy or completeness of electronic copies of this plan sheet.

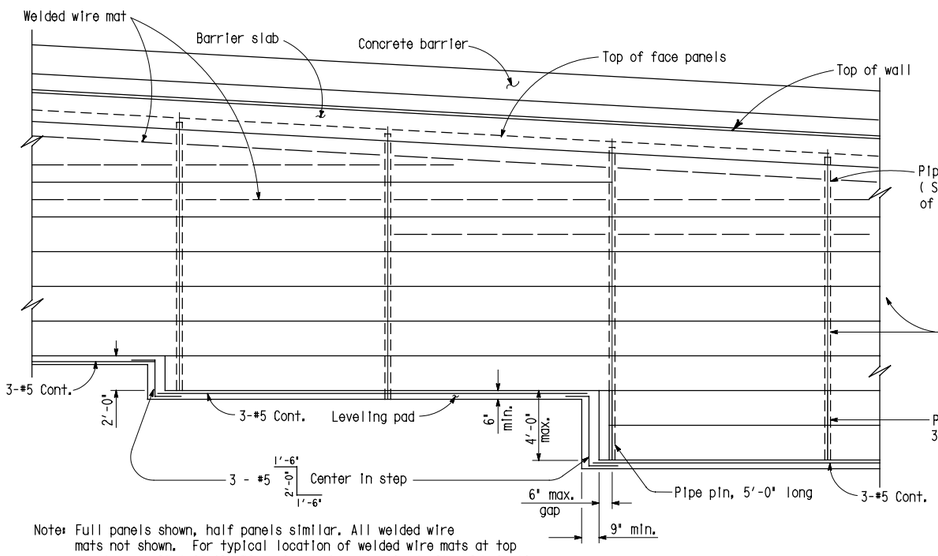

Note: Full panels shown, half panels similar. All welded wire mats not shown. For typical location of welded wire mats at top panels, see 'Detail A'. Pipe pins to be galvanized after fabrication.

PART REAR ELEVATION WITH CONCRETE BARRIER

1/4" = 1'-0"

(Part rear elevation with concrete coping is similar.)
(Top of wall slope - 6.25 :1 or flatter)

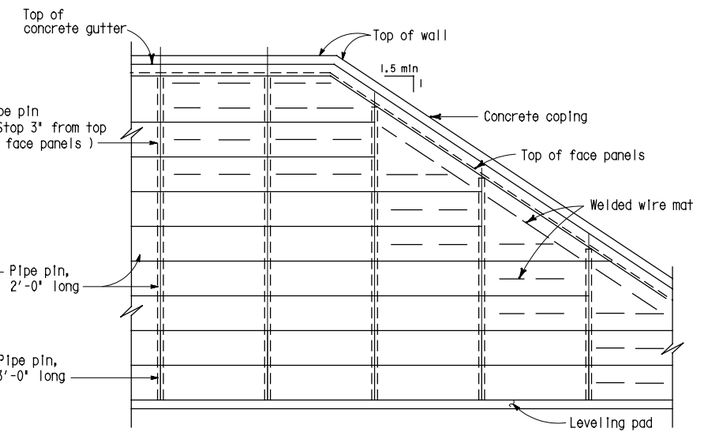

Note: All welded wire mats not shown. For typical location of welded wire mats at top panels, see 'Detail C'.

PART REAR ELEVATION - HALF PANELS

1/4" = 1'-0"

(Top of wall slope between 3.125 :1 and 1.5 :1)

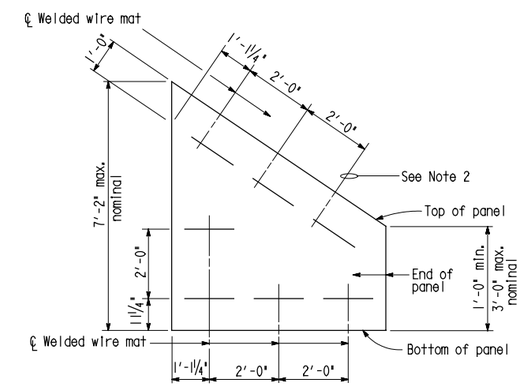

DETAIL C

1/2" = 1'-0"

Note: 1. Omit welded wire mats within lower levels that would conflict with a mat located parallel to top of panel.

2. Omit this mat if connector mat wire is within 2" of bottom of panel.

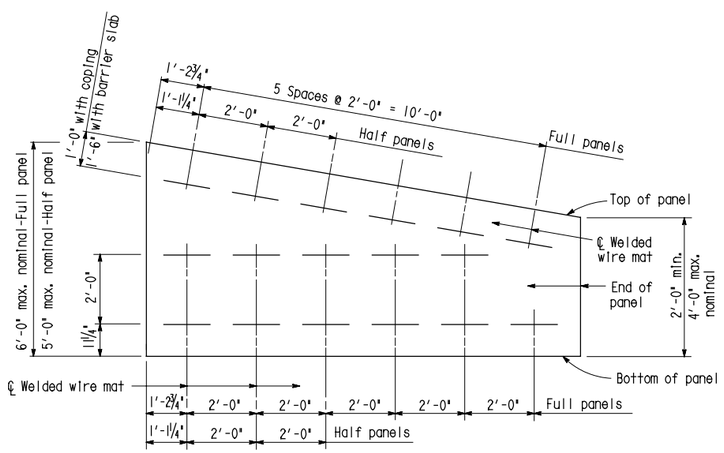

DETAIL A

1/2" = 1'-0"

Note: Omit welded wire mats within lower levels that would be closer than 6" from a mat located in the level parallel to the top of panel.

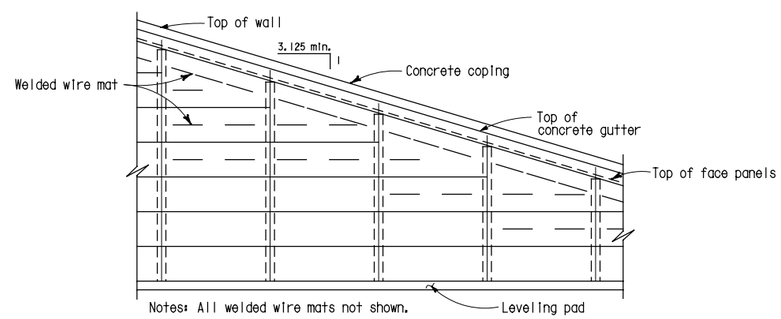

Notes: All welded wire mats not shown.
For typical location of welded wire mats at top panels, see 'Detail B'.

PART REAR ELEVATION - HALF PANELS

1/4" = 1'-0"

(Maximum top of wall slope - 3.125 :1)

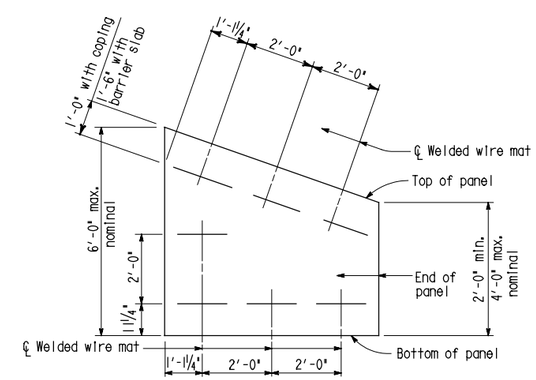

DETAIL B

1/2" = 1'-0"

Note: Omit welded wire mats within lower levels that would conflict with a mat located in the level parallel to top of panel.

100% SUBMITTAL
NOT FOR CONSTRUCTION
March 16, 2006

STANDARD DRAWING				
FILE NO. XS 11-2	DESIGN	BY J.C. MOESE	CHECKED S.D. WIMAN	APPROVAL RECOMMENDED BY
DESIGN DATE 3/98	DETAILS	BY R. YEE	CHECKED S.D. WIMAN	DESIGN SUPERVISOR
	SUBMITTED BY			

DS OSD 2147A (CADD 7/97)

ORIGINAL SCALE IN INCHES FOR REDUCED PLANS 0 1 2 3

STATE OF CALIFORNIA
DEPARTMENT OF TRANSPORTATION

DIVISION OF STRUCTURES
STRUCTURE DESIGN

CU
EA

BRIDGE NO.

POST MILE

DISREGARD PRINTS BEARING EARLIER REVISION DATES

REVISION DATES (PRELIMINARY STAGE ONLY)

SHEET 9 OF 18

MONTE VISTA AVENUE GRADE SEPARATION
MECHANICALLY STABILIZED EMBANKMENT DETAILS NO. 2

RELEASED 3-24-98

DIST.	COUNTY	ROUTE	POST MILES TOTAL PROJECT	SHEET NO.	TOTAL SHEETS
				74	82

REGISTERED ENGINEER - CIVIL

REGISTERED PROFESSIONAL ENGINEER MOHAN S. CHAR No. C-057894 Exp. 6-06 CIVIL STATE OF CALIFORNIA

PLANS APPROVAL DATE

The State of California or its officers or agents shall not be responsible for the accuracy or completeness of electronic copies of this plan sheet.

TABLE	
WELDED WIRE MAT DENSITY	PANEL REINFORCEMENT
6 - W11 MATS OR LESS	D5 @ 6
4 - W20 MATS	D7 @ 6
6 - W20 MATS	D9 @ 6

Densities shown are for full panels

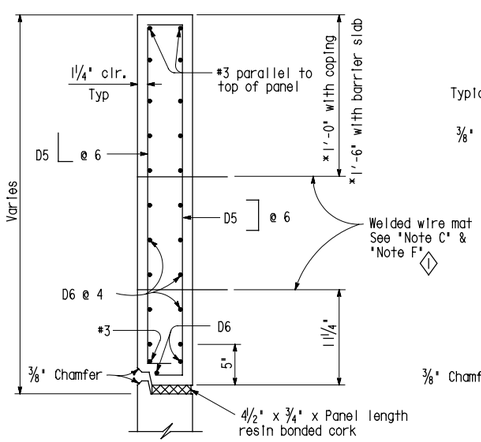

* Measured normal to top of panel

TOP PANEL

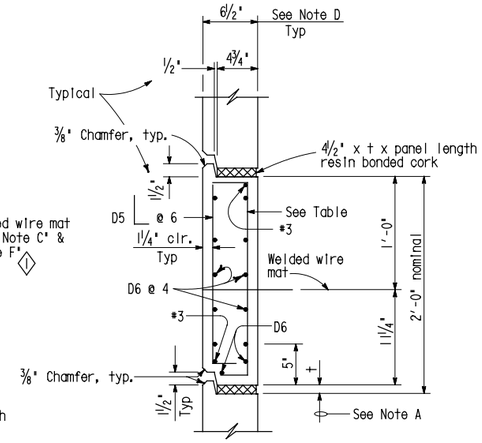

INTERMEDIATE PANEL

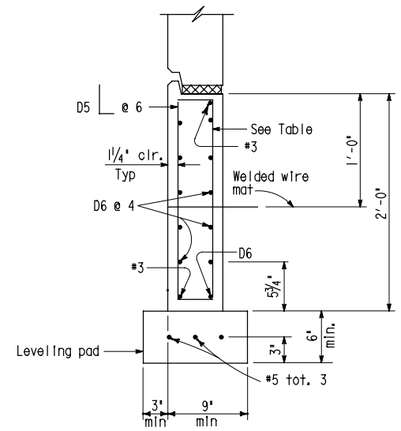

BOTTOM PANEL

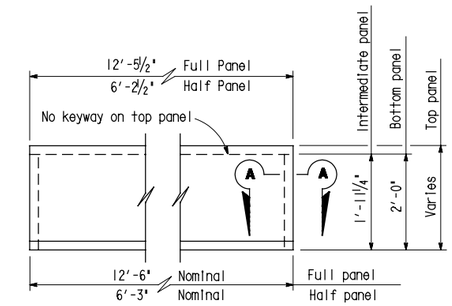

FRONT ELEVATION - FACE PANEL

Note A: For joints ≤ 20' below top of wall, t=¾". For joints > 20' below top of wall, t=1".

Note B: Except for #3 bars reinforcement may be fabricated as welded wire fabric.

Note C: Number of levels of welded mats in top panel varies, See M.S.E. Details No. 2 sheet.

Note D: Dimension to be increased to compensate for architectural treatment. For architectural treatment, refer to Project Plans. The position of panel reinforcement and the width of the seat at the top and bottom of the panel shall remain unchanged.

Note E: Panels to be cast straight along their length.

◇1 Note F: Adjust top panel wire mats as necessary to clear utility casing under structure approach slab.

SECTIONS - FACE PANELS

1½" = 1'-0"

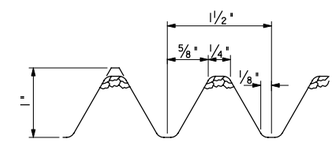

1" FRACTURED FIN DETAIL

No Scale

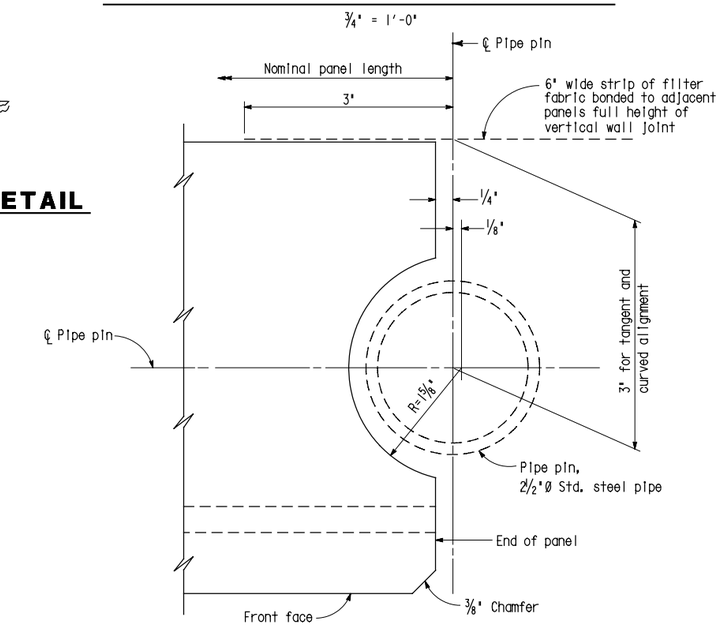

SECTION A-A

12" = 1'-0"

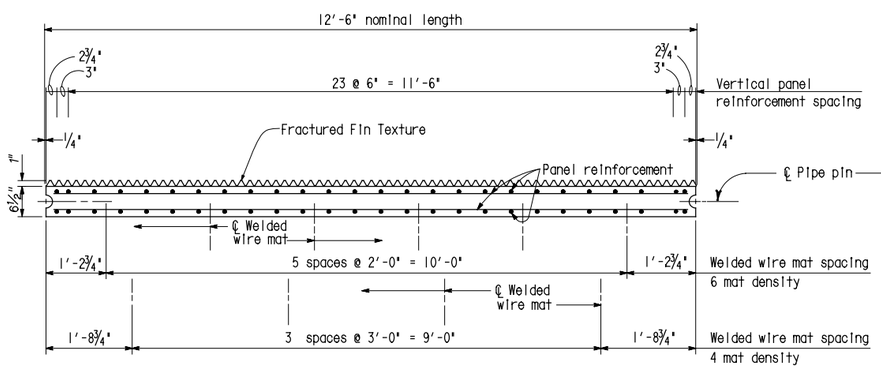

PLAN - FULL FACE PANEL

¾" = 1'-0"

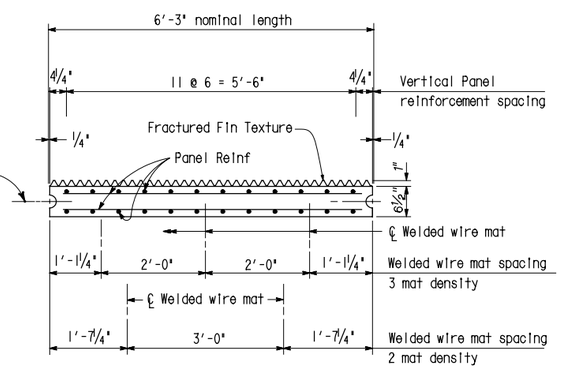

PLAN - HALF FACE PANEL

¾" = 1'-0"

100% SUBMITTAL NOT FOR CONSTRUCTION
March 16, 2006

STANDARD DRAWING				
FILE NO. X8 11-3	DESIGN	BY J.C. MOESE	CHECKED S.D. WIMAN	APPROVAL RECOMMENDED BY
DESIGN DATE 3/98	DETAILS	BY R. YEE	CHECKED S.D. WIMAN	DESIGN SUPERVISOR
	SUBMITTED BY			

◇1 Added Note

STATE OF CALIFORNIA DEPARTMENT OF TRANSPORTATION

DIVISION OF STRUCTURES STRUCTURE DESIGN

BRIDGE NO.

POST MILE

MONTE VISTA AVENUE GRADE SEPARATION

MECHANICALLY STABILIZED EMBANKMENT DETAILS NO. 3

DS OSD 2147A (CADD 7/97)

ORIGINAL SCALE IN INCHES FOR REDUCED PLANS 0 1 2 3

CU EA

DISREGARD PRINTS BEARING EARLIER REVISION DATES

REVISION DATES (PRELIMINARY STAGE ONLY)

SHEET 10 OF 18

RELEASED 3-24-98

DIST.	COUNTY	ROUTE	POST MILES TOTAL PROJECT	SHEET NO.	TOTAL SHEETS
				75	82

REGISTERED ENGINEER - CIVIL

REGISTERED PROFESSIONAL ENGINEER MOHAN S. CHAR No. C-057894 Exp. 6-06 CIVIL STATE OF CALIFORNIA

PLANS APPROVAL DATE

The State of California or its officers or agents shall not be responsible for the accuracy or completeness of electronic copies of this plan sheet.

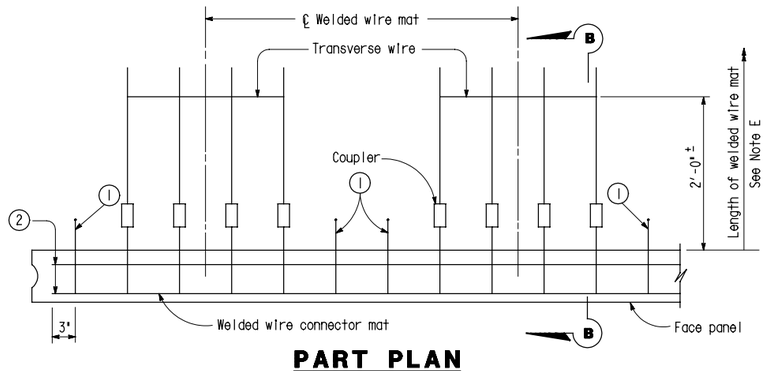

PART PLAN

No Scale

(1) These wires may be bent down at rear face of panel after concrete has sufficient strength to prevent spalling concrete or they may be cut back to provide 1¼" concrete cover. These wires connect to mat for 6 mat density .

(2) Bend these wires to provide a minimum of 1¼" cover to end of connector mat.

Note: Panel reinforcement not shown.
Panel with 4 mat density is shown. Panel with 6 mat density is similar.

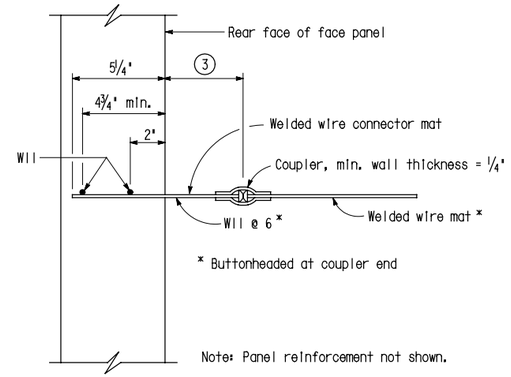

SECTION B-B

3" = 1'-0"

Welded wire mats with W11 longitudinal wires

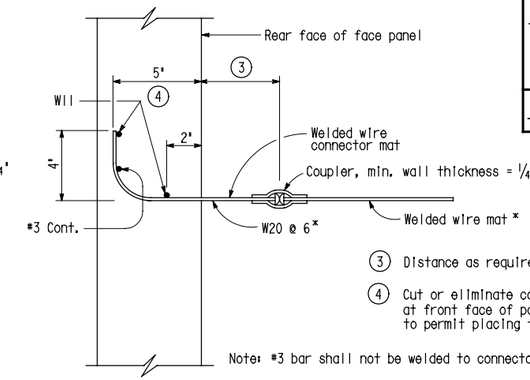

(3) Distance as required to permit coupler to be swaged.

(4) Cut or eliminate conflicting D6 wire of panel reinforcement at front face of panel at level of welded wire connector mat to permit placing this mat at 5 inch embedment.

Note: #3 bar shall not be welded to connector mat.

SECTION B-B

3" = 1'-0"

Welded wire mats with W20 longitudinal wires

WELDED WIRE MAT CONNECTION DETAIL

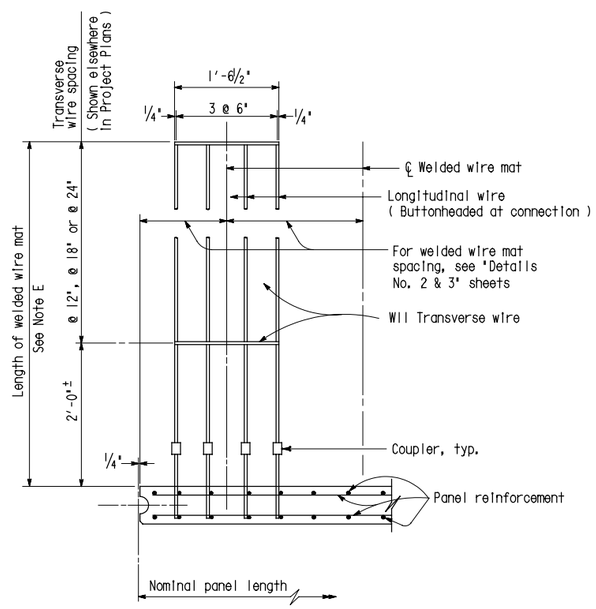

WELDED WIRE MAT DETAIL

1" = 1'-0"

Note E: Length equals 'Base Width' of wall, except it shall not be less than 16 feet for top level of mats for the top panels when a concrete barrier is used.

GENERAL NOTES

Live loading: Surcharge - 240 psf

Soil parameters:

Internal design - $\phi = 34°$, $\gamma = 120$ pcf
External design - ϕ (Backfill) = 34°, $\gamma = 120$ pcf
ϕ (Foundation) = 30°

Precast concrete panels:

f'c = 4,000 psi (Concrete compressive strength at 28 days)
fy = 60,000 psi (Yield strength of reinforcement)

Soil reinforcement:

Welded wire mats: - fy = 65,000 psi (Yield strength)
Coupler: - fy = 36,000 psi (Yield strength)
Corrosion rate - 1.3 Mils/year

Reinforced concrete:

f'c = 3,250 psi (Concrete compressive strength at 28 days)
fy = 60,000 psi (Yield strength of reinforcement)

MSE = Mechanically stabilized embankment

100% SUBMITTAL
NOT FOR CONSTRUCTION
March 16, 2006

STANDARD DRAWING				
FILE NO. XS 11-4	DESIGN	BY J.C. MOESE	CHECKED S.D. WIMAN	APPROVAL RECOMMENDED BY
DESIGN DATE 3/98	DETAILS	BY R. YEE	CHECKED S.D. WIMAN	DESIGN SUPERVISOR
	SUBMITTED BY			

DS OSD 2147A (CADD 7/97)

ORIGINAL SCALE IN INCHES FOR REDUCED PLANS 0 1 2 3

STATE OF CALIFORNIA
DEPARTMENT OF TRANSPORTATION

DIVISION OF STRUCTURES
STRUCTURE DESIGN

CU
EA

BRIDGE NO.
POST MILE

MONTE VISTA AVENUE GRADE SEPARATION
MECHANICALLY STABILIZED EMBANKMENT DETAILS NO. 4

DISREGARD PRINTS BEARING EARLIER REVISION DATES

REVISION DATES (PRELIMINARY STAGE ONLY)

SHEET 11 OF 18

RELEASED 11-25-97

DIST.	COUNTY	ROUTE	POST MILES TOTAL PROJECT	SHEET NO.	TOTAL SHEETS
				76	82

REGISTERED ENGINEER - CIVIL

REGISTERED PROFESSIONAL ENGINEER MOHAN S. CHAR No. C-057894 Exp. 6-06 CIVIL STATE OF CALIFORNIA

PLANS APPROVAL DATE

The State of California or its officers or agents shall not be responsible for the accuracy or completeness of electronic copies of this plan sheet.

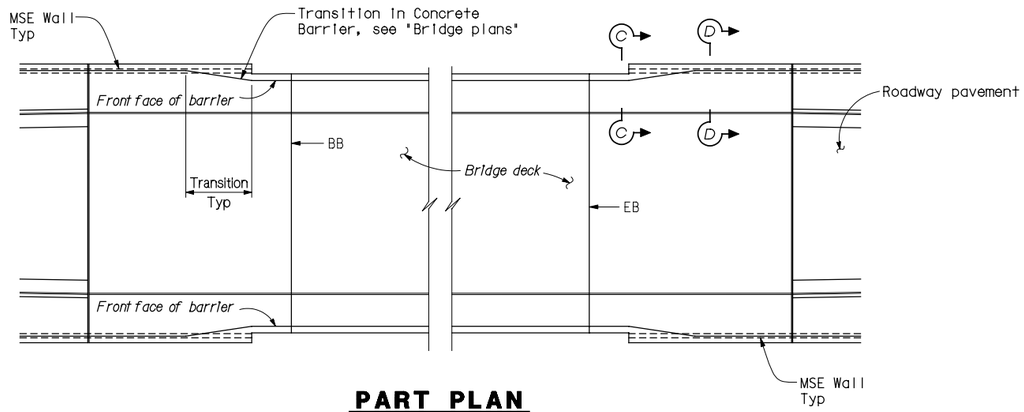

PART PLAN

No Scale

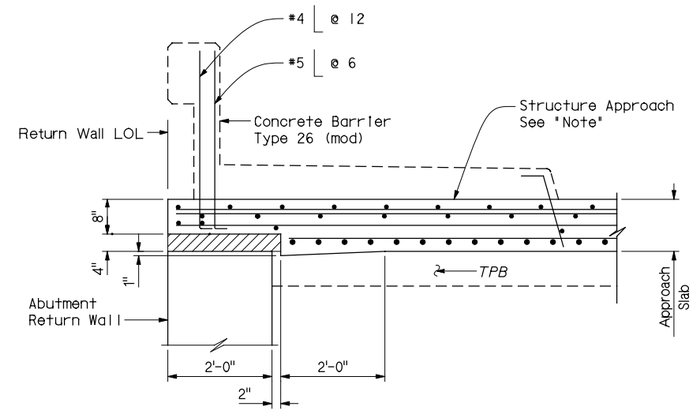

SECTION C-C

3/4" = 1'-0"

Note:
For information not shown, see 'Structure Approach Type N(30S)' sheet on 'Bridge Plans'.

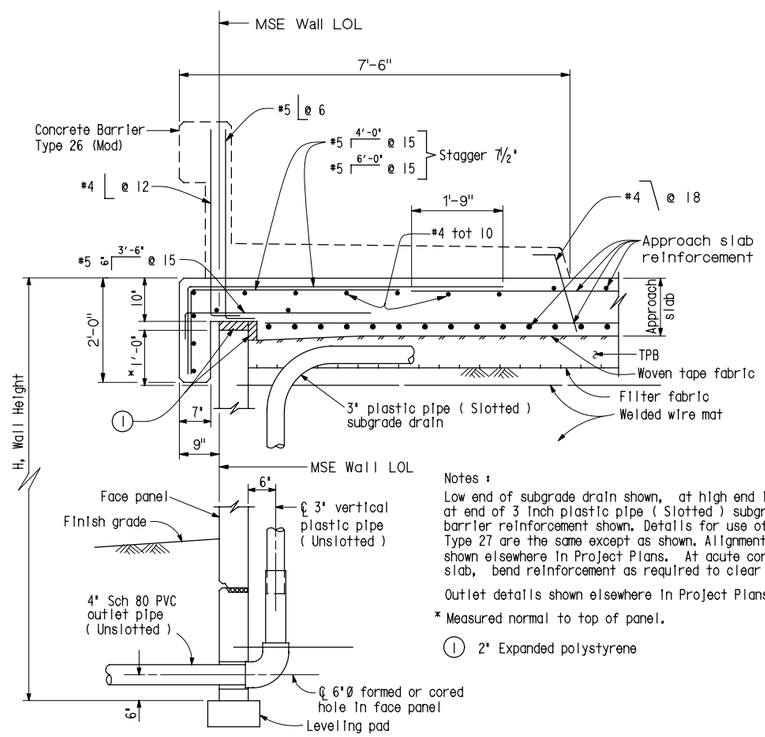

Notes :

Low end of subgrade drain shown, at high end install cap at end of 3 inch plastic pipe (Slotted) subgrade drain. Not all barrier reinforcement shown. Details for use of Concrete Barrier Type 27 are the same except as shown. Alignment of LOL or WLOL shown elsewhere in Project Plans. At acute corners of approach slab, bend reinforcement as required to clear expansion joint.

Outlet details shown elsewhere in Project Plans.

* Measured normal to top of panel.

(1) 2" Expanded polystyrene

SECTION D-D

3/4" = 1'-0"

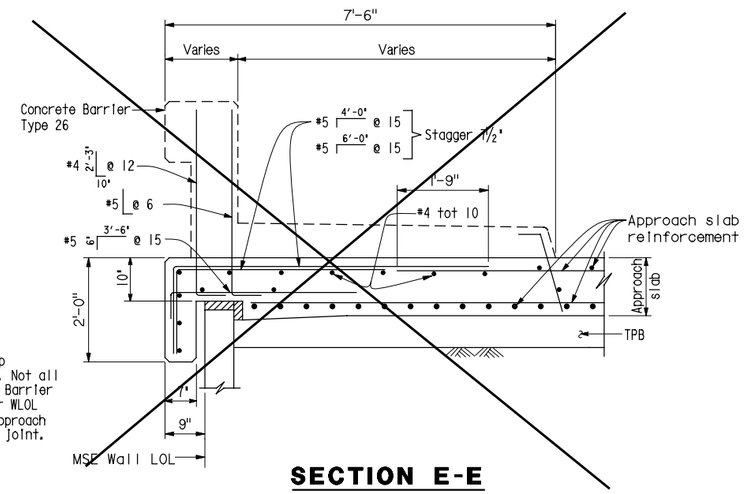

SECTION E-E

3/4" = 1'-0"

Note:
For information not shown, see 'Section D-D'.

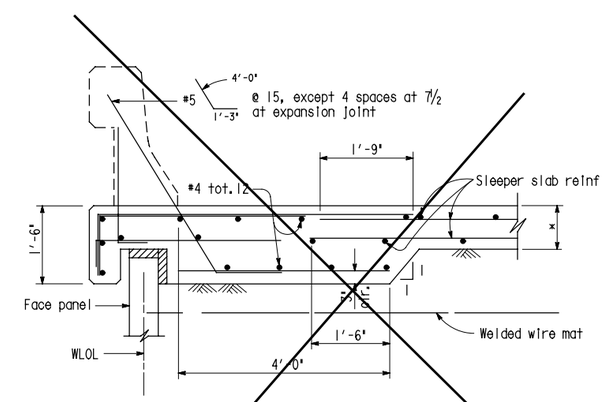

SECTION D-D

3/4" = 1'-0"

Note: For details not shown see 'Section B-B'

* Thickness of pavement shown elsewhere in Project Plans

100% SUBMITTAL
NOT FOR CONSTRUCTION
March 16, 2006

Note: The details on this sheet are to be used with the structure approach details shown elsewhere in the Project Plans.

STANDARD DRAWING				
FILE NO. XS 11-5	DESIGN	BY J.C. MOESE	CHECKED S.D. WIMAN	APPROVAL RECOMMENDED BY
DESIGN DATE 1/89	DETAILS	BY R. YEE	CHECKED S.D. WIMAN	DESIGN SUPERVISOR
	SUBMITTED BY			

DS OSD 2147A (CADD 7/97)

ORIGINAL SCALE IN INCHES FOR REDUCED PLANS 0 1 2 3

STATE OF CALIFORNIA
DEPARTMENT OF TRANSPORTATION

DIVISION OF STRUCTURES
STRUCTURE DESIGN

CU
EA

BRIDGE NO.

POST MILE

MONTE VISTA AVENUE GRADE SEPARATION
MECHANICALLY STABILIZED EMBANKMENT DETAILS NO. 5

DISREGARD PRINTS BEARING EARLIER REVISION DATES

REVISION DATES (PRELIMINARY STAGE ONLY)

SHEET 12 OF 18

RELEASED 3-24-98

DIST.	COUNTY	ROUTE	POST MILES TOTAL PROJECT	SHEET NO.	TOTAL SHEETS
				77	82

REGISTERED ENGINEER - CIVIL

REGISTERED PROFESSIONAL ENGINEER MOHAN S. CHAR No. C-057894 Exp. 6-06 CIVIL STATE OF CALIFORNIA

PLANS APPROVAL DATE

The State of California or its officers or agents shall not be responsible for the accuracy or completeness of electronic copies of this plan sheet.

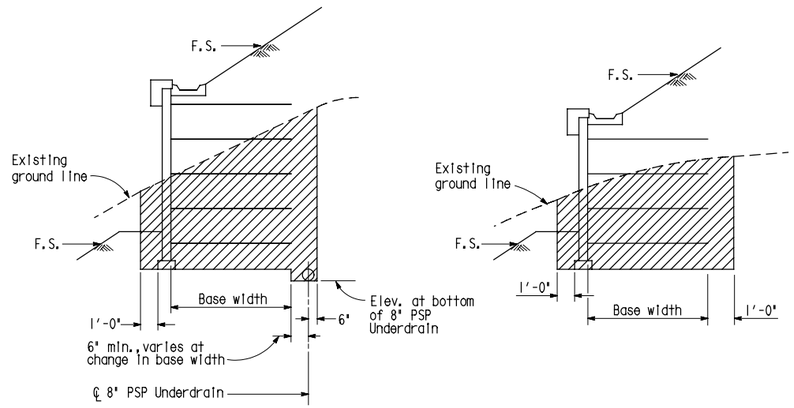

WITH UNDERDRAIN **WITHOUT UNDERDRAIN**

LIMITS OF EXCAVATION

No Scale

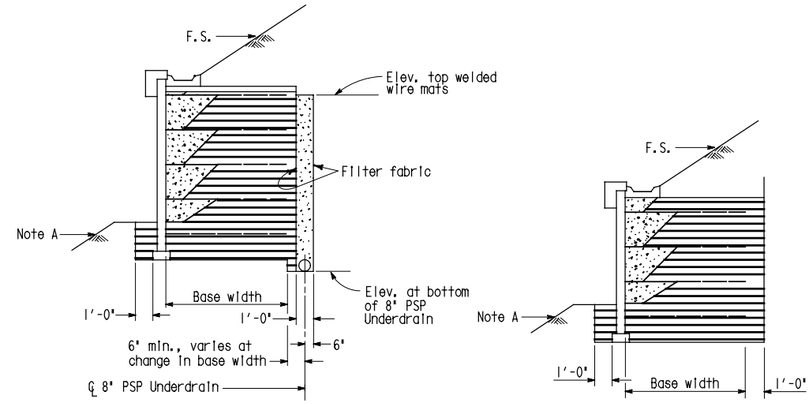

SLOPING FINISHED SURFACE WITH UNDERDRAIN **SLOPING FINISHED SURFACE WITHOUT UNDERDRAIN**

LIMITS OF BACKFILL

No Scale

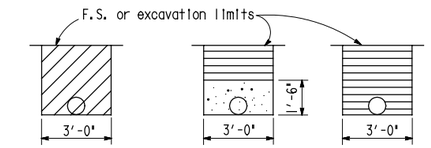

EXCAVATION **OUTLET PIPE** **CLEANOUT PIPE**

BACKFILL

OUTLET OR CLEANOUT PIPE FOR UNDERDRAIN

No Scale

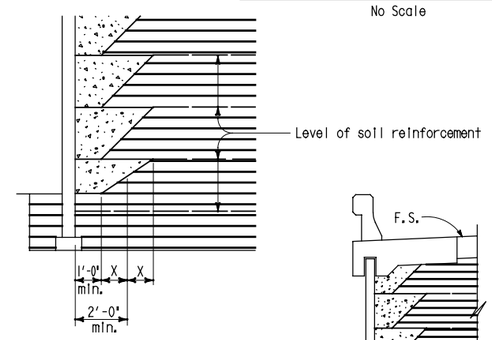

LIMITS OF PERMEABLE MATERIAL

ABBREVIATIONS

O.G.	Original ground
F.S.	Planned finished surface
G.P.	Planned grading plane

LEGEND

- Limits of structure excavation
- Limits of structure backfill
- Limits of permeable material

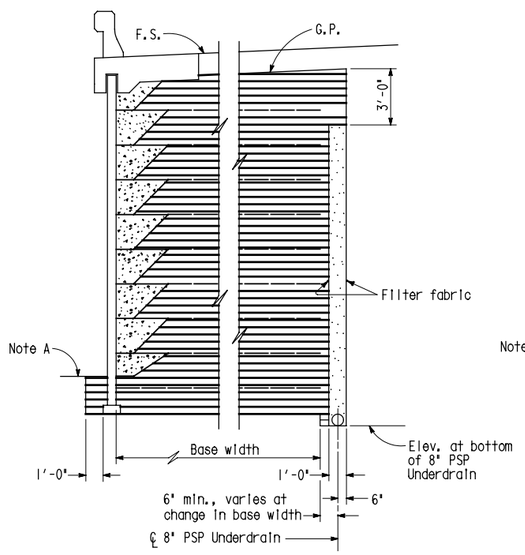

ROADWAY SECTION WITH UNDERDRAIN BASE WIDTH 16' OR GREATER

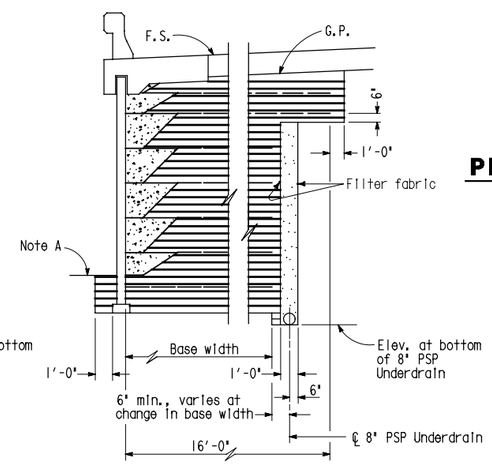

ROADWAY SECTION WITH UNDERDRAIN BASE WIDTH LESS THAN 16'

LIMITS OF BACKFILL

No Scale

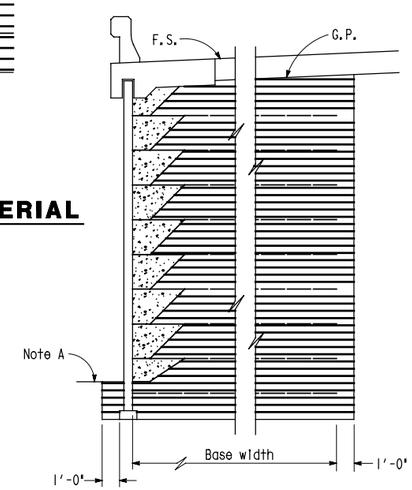

ROADWAY SECTION WITHOUT UNDERDRAIN BASE WIDTH 16' OR GREATER

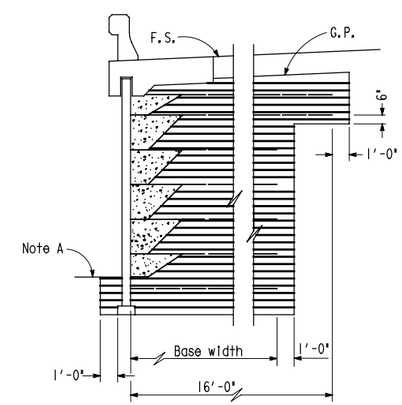

ROADWAY SECTION WITHOUT UNDERDRAIN BASE WIDTH LESS THAN 16'

LIMITS OF BACKFILL

No Scale

100% SUBMITTAL NOT FOR CONSTRUCTION

March 16, 2006

Note A:
Limits to F.S. except to G.P. when in a roadway section.

STANDARD DRAWING				
FILE NO. **XS 11-7**	DESIGN	BY J.C. MOESE	CHECKED S.D. WIMAN	APPROVAL RECOMMENDED BY
DESIGN DATE **3/98**	DETAILS	BY R. YEE	CHECKED S.D. WIMAN	DESIGN SUPERVISOR
	SUBMITTED BY			

DS OSD 2147A (CADD 7/97)

ORIGINAL SCALE IN INCHES FOR REDUCED PLANS 0 1 2 3

STATE OF **CALIFORNIA** DEPARTMENT OF TRANSPORTATION

DIVISION OF STRUCTURES STRUCTURE DESIGN

CU
EA

BRIDGE NO.

POST MILE

MONTE VISTA AVENUE GRADE SEPARATION

MECHANICALLY STABILIZED EMBANKMENT DETAILS NO. 7

DISREGARD PRINTS BEARING EARLIER REVISION DATES

REVISION DATES (PRELIMINARY STAGE ONLY)

SHEET 13 OF 18

DIST.	COUNTY	ROUTE	POST MILES TOTAL PROJECT	SHEET NO.	TOTAL SHEETS
				78	82

REGISTERED ENGINEER - CIVIL

REGISTERED PROFESSIONAL ENGINEER MOHAN S. CHAR No. C-057894 Exp. 6-06 CIVIL STATE OF CALIFORNIA

PLANS APPROVAL DATE

The State of California or its officers or agents shall not be responsible for the accuracy or completeness of electronic copies of this plan sheet.

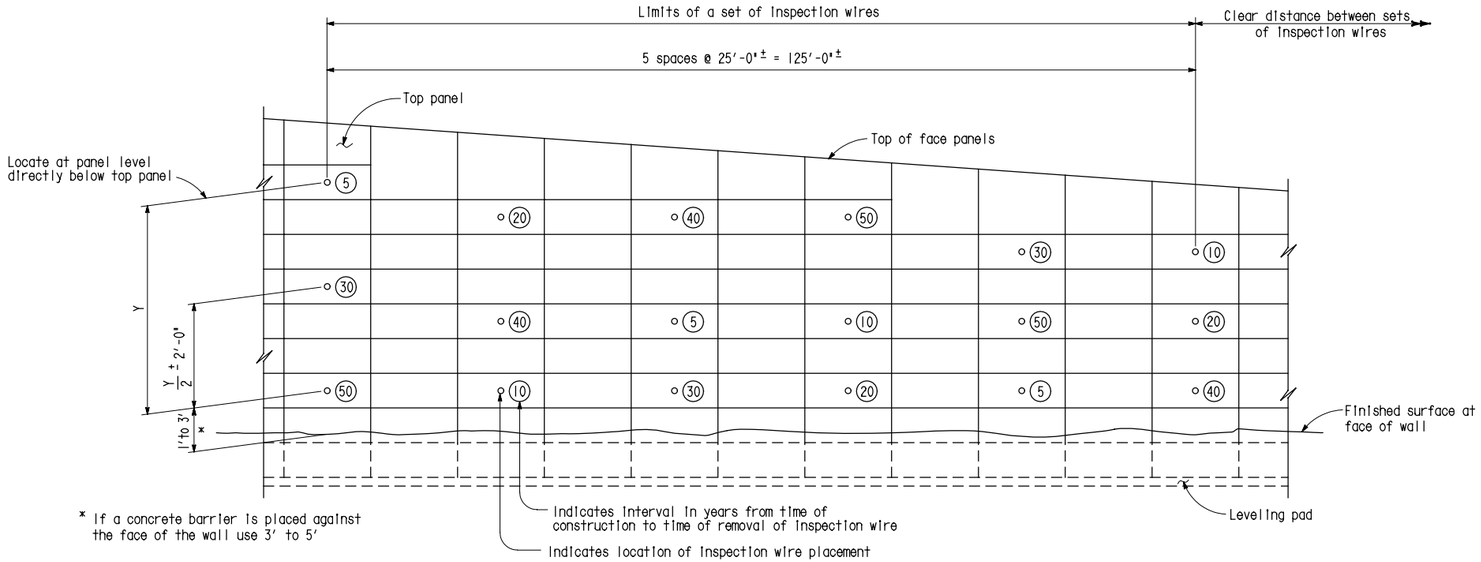

* If a concrete barrier is placed against the face of the wall use 3' to 5'

PART ELEVATION

Scale: Vert. 1"= 4'
Horz. 1"=10'

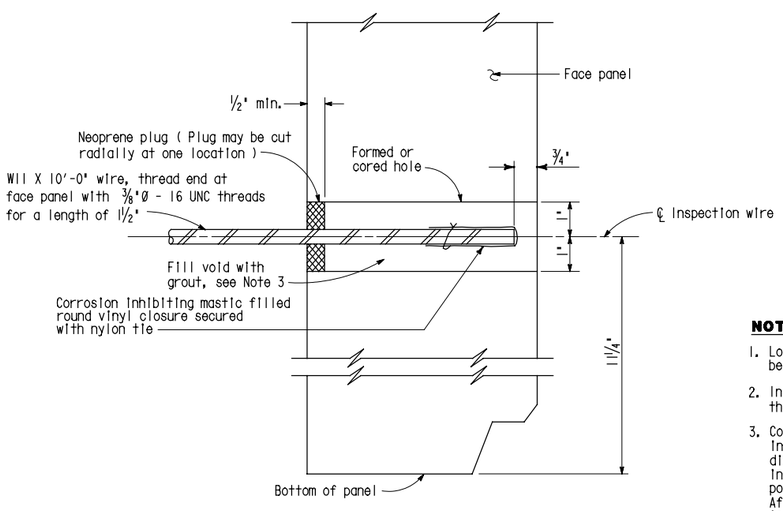

SECTION THRU INSPECTION WIRE

1/2" = 1'-0"

NOTES:

1. A set of inspection wires is required for each individual wall which has a segment which is at least 125 feet long and which has an 'H' equal to or greater than 16 feet.
2. An additional set of inspection wires is required for each 125 foot long segment of wall with an 'H' equal to or greater than 16 feet and which is 500 feet or more clear from another set of inspection wires.
3. The layout for the locations of the sets of inspection wires for a wall shall maximize the number of locations. The clear distance between sets of inspection wires need not be less than 500 feet.
4. Walls which do not require a set of inspection wires based on the criteria in Note 1 shall have inspection wires installed. For these walls a single level of inspection wires shall be installed at a uniform spacing of 25 feet maximum along this level. The location of this level shall be at the first panels above the base of the wall which will be fully exposed after completion of the wall. A minimum of 6 inspection wires shall be installed.
5. Actual locations for installation of inspection wires are shown elsewhere in Project Plans.

NOTES:

1. Locate inspection wire at mid-length of full face panels, or centered between two welded wire mats of half face panels.
2. Inspection wires are to be fabricated from wire representative of the wire used for the welded wire mats for the wall.
3. Contractor shall provide spacers in addition to the neoprene plug indicated to maintain the inspection wire in the center of the 2" diameter hole during backfill placement. Prior to backfilling over inspection wire, inspection wire shall be placed so that its final position will be horizontal and perpendicular to the wall panel. After backfill placement to a level at least 2 foot above the inspection wire, remove the additional spacers and dry pack opening with 1,000 to 1,500 psi grout. Trowel grout smooth and flush with face of panel.

100% SUBMITTAL
NOT FOR CONSTRUCTION
March 16, 2006

STANDARD DRAWING				
FILE NO. XS 11-9	DESIGN	BY J.C. MOESE	CHECKED S.D. WIMAN	APPROVAL RECOMMENDED BY
DESIGN DATE 3/98	DETAILS	BY R. YEE	CHECKED S.D. WIMAN	DESIGN SUPERVISOR
	SUBMITTED BY			

DS OSD 2147A (CADD 7/97)

ORIGINAL SCALE IN INCHES FOR REDUCED PLANS 0 1 2 3

STATE OF CALIFORNIA
DEPARTMENT OF TRANSPORTATION

DIVISION OF STRUCTURES
STRUCTURE DESIGN

CU
EA

BRIDGE NO.
POST MILE

MONTE VISTA AVENUE
GRADE SEPARATION
MECHANICALLY STABILIZED EMBANKMENT
DETAILS NO. 9

DISREGARD PRINTS BEARING EARLIER REVISION DATES

REVISION DATES (PRELIMINARY STAGE ONLY)

SHEET 14 OF 18

Notes:

(1) 1.4-inch samples were taken using a SPT sampler with an inside diameter (I.D.) of 1.4" and an outside diameter (O.D.) of 2".

(2) 2.4-inch samples were taken using a California sampler with an inside diameter (I.D.) of 2.4" and an outside diameter (O.D.) of 3".

(3) Both samplers were driven using a 140-pound automatic trip hammer falling a distance of 30 inches.

PLAN

1"=30'

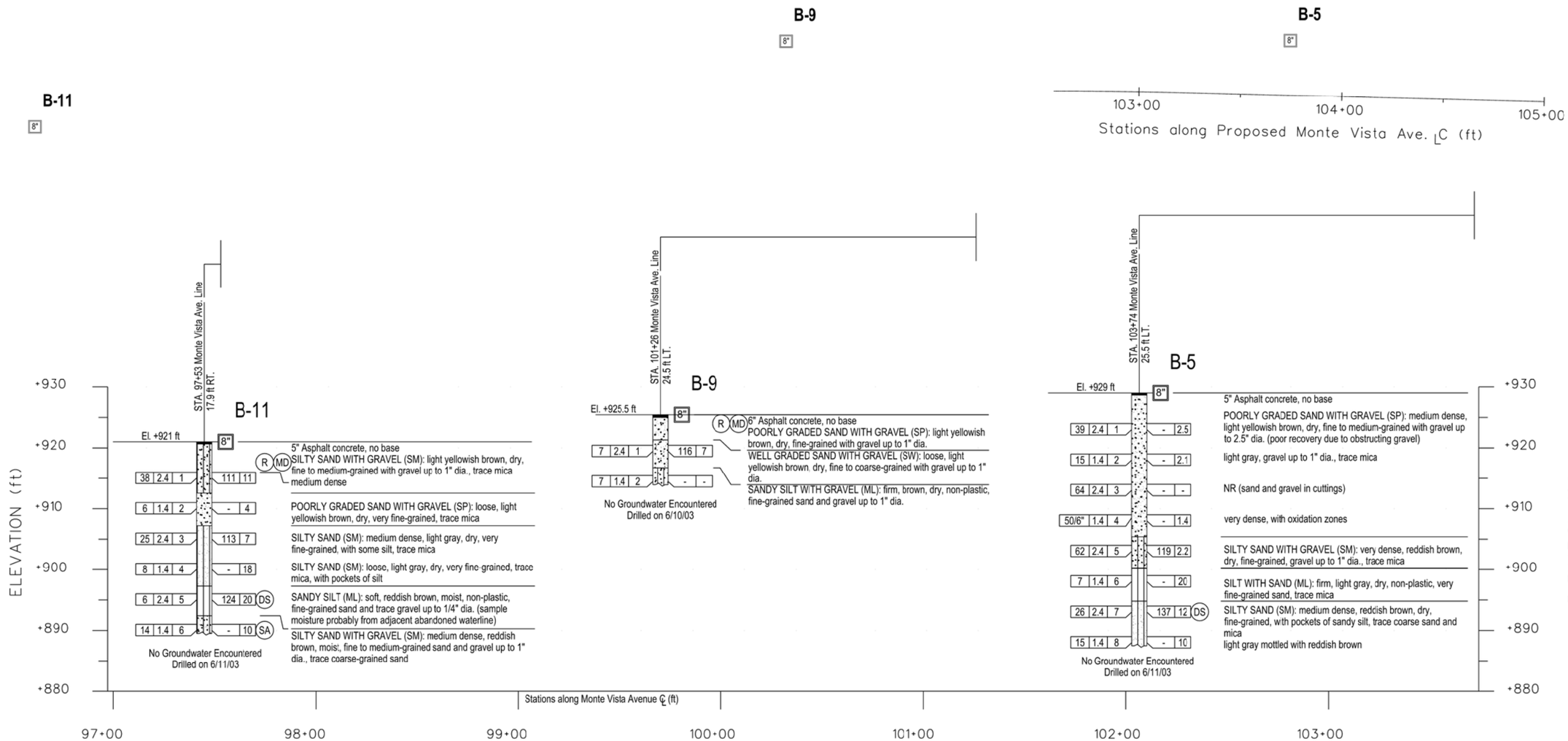

PROFILE

VERTICAL 1"=10'

HORIZONTAL 1"=30'

LEGEND OF BORING OPERATIONS

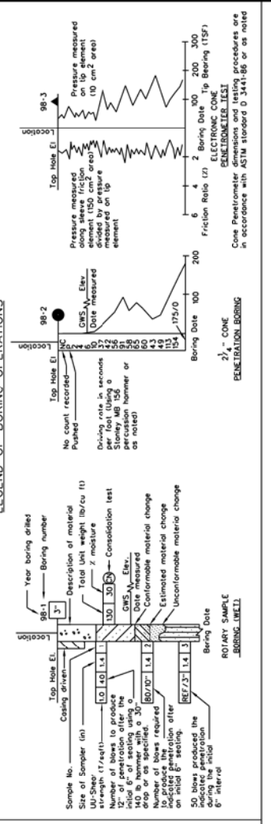

IN-SITU, LAB & FIELD TEST DESIGNATIONS

- (AL) ATTERBERG LIMITS
- (CA) CHEMICAL ANALYSIS
- (CN) CONSOLIDATION
- (CU) CONSOLIDATED UNDRAINED TRIAXIAL
- (DS) DIRECT SHEAR
- (MD) MAX. DRY DENSITY
- (PP) POCKET PENETROMETER
- (SA) SIEVE ANALYSIS
- (SE) SAND EQUIVALENT
- (R) R-VALUE
- (UC) UNCONSOLIDATED UNDRAINED TRIAXIAL
- (W) WASH #200

TYPE OF BORINGS

- 2 1/4" CONE PENETRATION
- ROTARY WASH
- ELECTRONIC CONE PENETROMETER
- AUGER BORING (DRY)
- TEST PIT
- DIAMOND CORE BORING
- SOIL TUBE

LEGEND OF EARTH MATERIALS (USCS) BASED ON ASTM D2487, D2488

- FILL MATERIAL
- CLAY (CL or CH)
- SILT (ML or MH)
- PEAT and/or ORGANIC MATTER
- WELL-GRADED GRAVEL (GW)
- POORLY-GRADED GRAVEL (GP)
- SILTY GRAVEL (GM)
- CLAYEY GRAVEL (GC)
- POORLY-GRADED SAND (SP)
- WELL GRADED SAND (SW)
- SILTY SAND (SM) or SANDY SILT
- CLAYEY SAND (SC) or SANDY CLAY
- COBBLES/BOULDERS
- IGNEOUS ROCK
- SEDIMENTARY ROCK
- METAMORPHIC ROCK

CONSISTENCY CLASSIFICATION FOR SOILS

According to the Standard Penetration Test (ASTM D-1586)

SPT N-value (blows/ft)	Granular	SPT N-value (blows/ft)	Cohesive
0 - 4	Very Loose	< 2	Very Soft
5 - 10	Loose	2 - 4	Soft
11 - 30	Medium Dense	5 - 8	Firm
31 - 50	Dense	9 - 15	Stiff
> 50	Very Dense	16 - 30	Very Stiff
		> 31	Hard

Note: Visual classification of earth materials are based on field inspection and are confirmed or revised with laboratory test results as necessary.

Underground Service Alert
Call: TOLL FREE 1-800 +22-4133
TWO WORKING DAYS BEFORE YOU DIG

REGISTERED PROFESSIONAL ENGINEER L. CHEANG NO. GE 2345 EXP. 9-30-05 GEOTECHNICAL STATE OF CALIFORNIA

Earth Mechanics, Inc.
Geotechnical and Earthquake Engineering
17660 Newhope Street, Suite E
Fountain Valley, California 92708

REVIEWED BY: Lino Cheang
L. CHEANG RGE #2345

DATE: 2-26-04

MARK	REVISIONS	BY	APPR.	DATE

APPROVED _____ 2006
MICHAEL HUDSON, CITY OF MONTCLAIR
DEVELOPMENT SERVICES DEPARTMENT-PUBLIC WORKS/ENGINEERING
REGISTERED CIVIL ENGINEER NO.
MY LICENSE EXPIRES
DRAWN BY: S. SICILIANO
CHECKED BY: L. YAN
RECOMMENDED BY:

CITY OF MONTCLAIR
DEVELOPMENT SERVICES DEPARTMENT

MONTE VISTA AVENUE
GRADE SEPARATION

LOG OF TEST BORINGS B-5, B-9, B-11

CITY FILE NO --------
DRAWING NO -----
SHEET 79 OF 82 SHEETS

Notes:

(1) 1.4-inch samples were taken using a SPT sampler with an inside diameter (I.D.) of 1.4" and an outside diameter (O.D.) of 2".

(2) 2.4-inch samples were taken using a California sampler with an inside diameter (I.D.) of 2.4" and an outside diameter (O.D.) of 3".

(3) Both samplers were driven using a 140-pound automatic trip hammer falling a distance of 30 inches.

PLAN

1"=50'

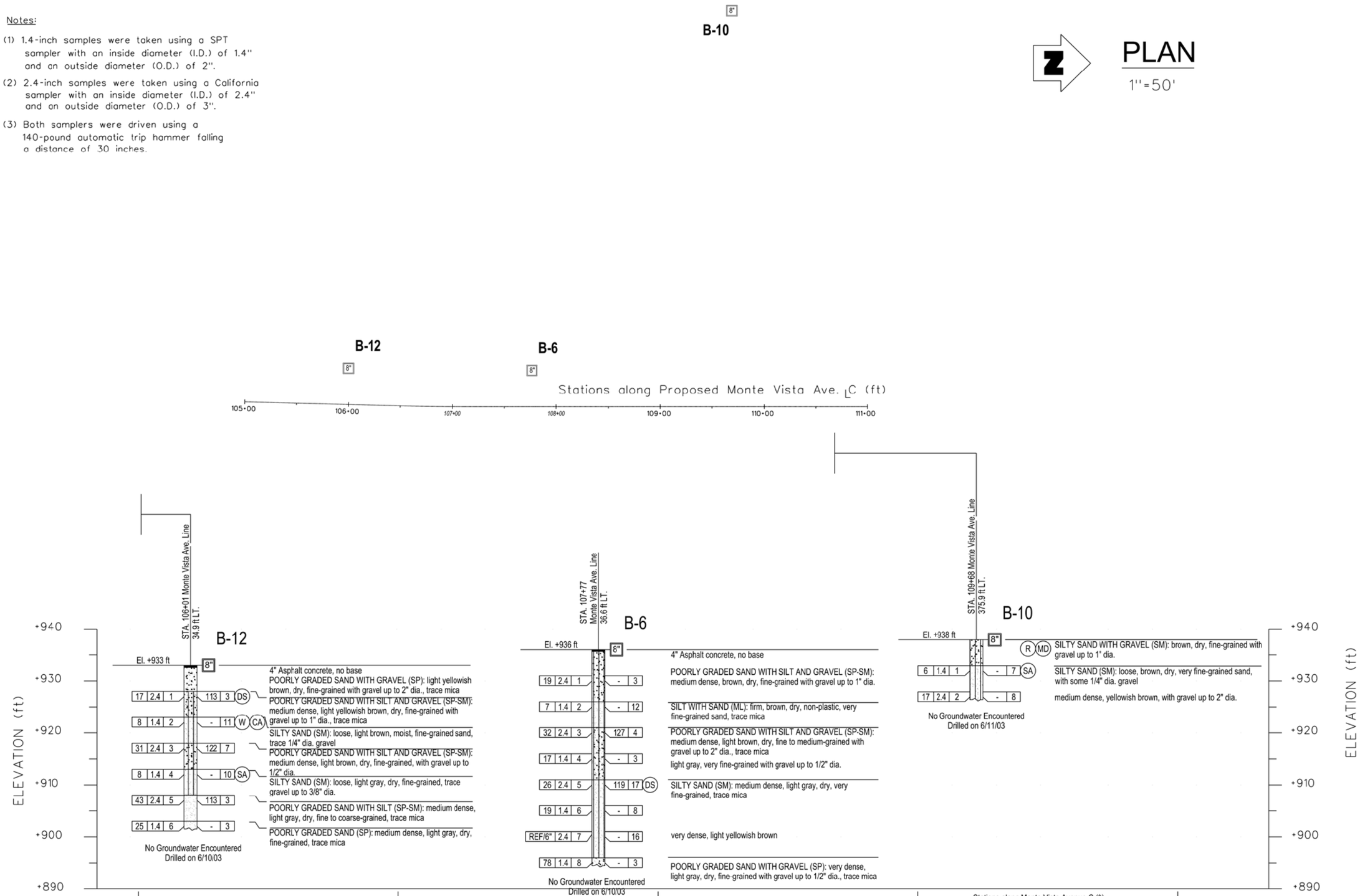

PROFILE

VERTICAL 1"=10'

HORIZONTAL 1"=20'

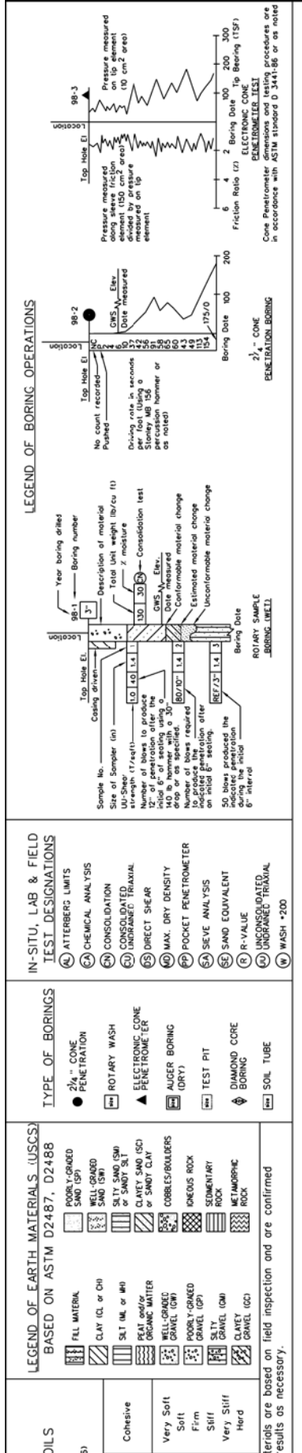

Underground Service Alert
Call TOLL FREE 1-800 422-4133
TWO WORKING DAYS BEFORE YOU DIG

REGISTERED PROFESSIONAL ENGINEER L. CHEANG NO. GE 2345 EXP. 9-30-05 GEOTECHNICAL STATE OF CALIFORNIA

Earth Mechanics, Inc.
Geotechnical and Earthquake Engineering
17660 Newhope Street, Suite E
Fountain Valley, California 92708

REVIEWED BY: Lino Cheang
L. CHEANG RGE #2345 DATE: 2-26-04

MARK	REVISIONS	BY	APPR.	DATE

APPROVED_____ 2006
MICHAEL HUDSON, CITY OF MONTCLAIR DEVELOPMENT SERVICES DEPARTMENT-PUBLIC WORKS/ENGINEERING
REGISTERED CIVIL ENGINEER NO. _____
MY LICENSE EXPIRES _____
DRAWN BY: S. SICILIANO
CHECKED BY: L. YAN
RECOMMENDED BY:

CITY OF MONTCLAIR
DEVELOPMENT SERVICES DEPARTMENT

MONTE VISTA AVENUE
GRADE SEPARATION

LOG OF TEST BORINGS B-6, B-10, B-12

CITY FILE NO --------
DRAWING NO -----
SHEET 80 OF 82 SHEETS

Notes:

(1) 1.4-inch samples were taken using a SPT sampler with an inside diameter (I.D.) of 1.4" and an outside diameter (O.D.) of 2".

(2) 2.4-inch samples were taken using a California sampler with an inside diameter (I.D.) of 2.4" and an outside diameter (O.D.) of 3".

(3) Both samplers were driven using a 140-pound automatic trip hammer falling a distance of 30 inches.

PLAN

1"=30'

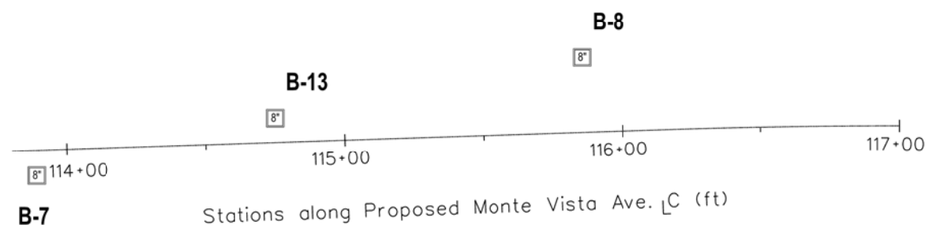

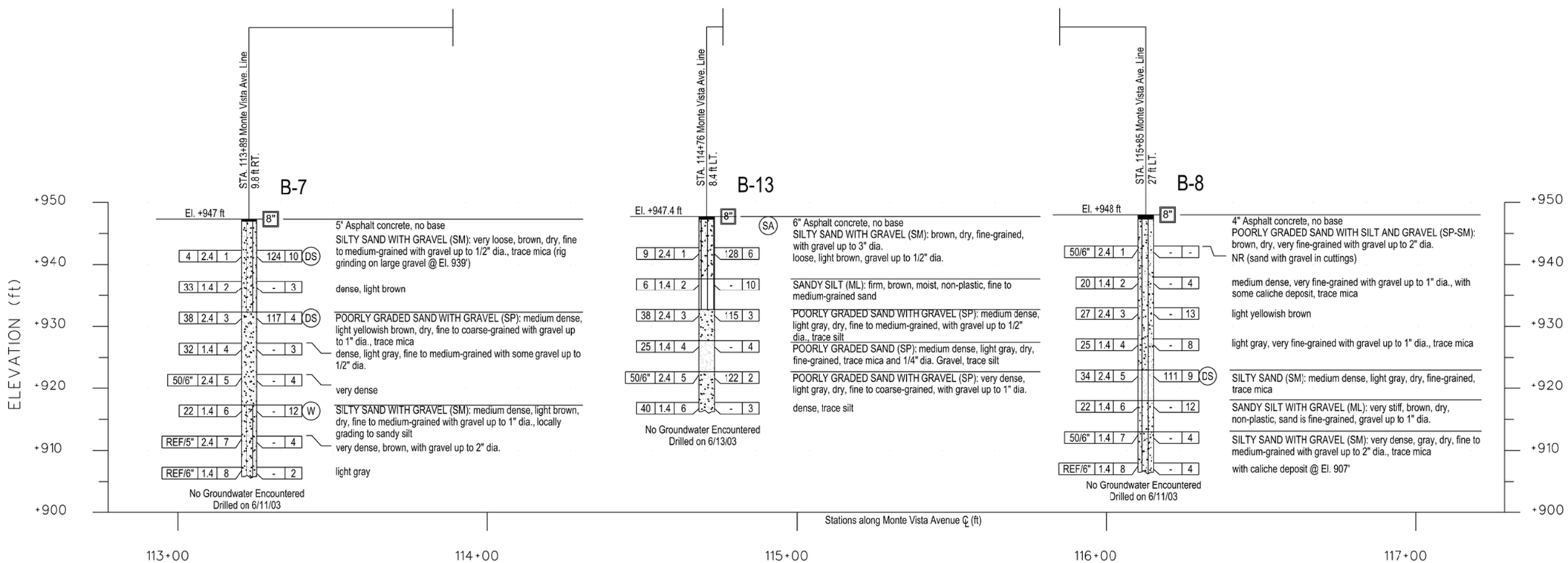

PROFILE

VERTICAL 1"=10'
HORIZONTAL 1"=20'

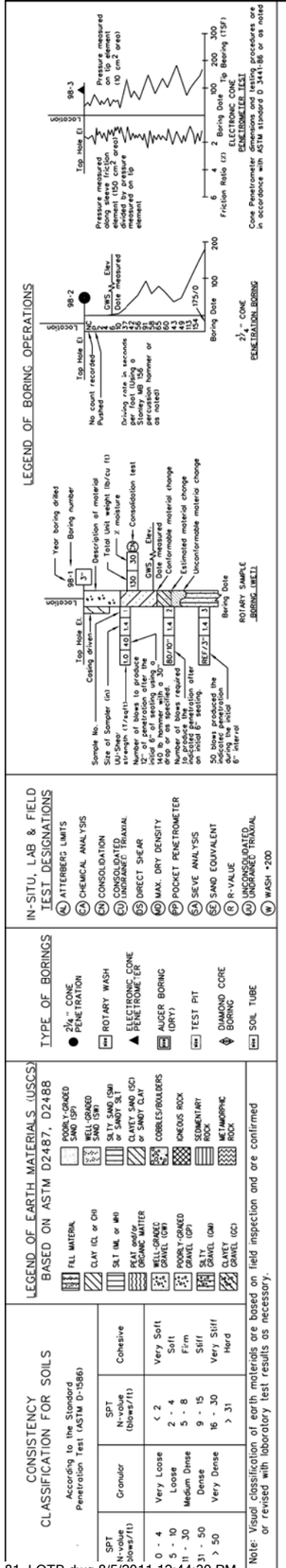

Underground Service Alert
Call TOLL FREE 1-800 422-4133
TWO WORKING DAYS BEFORE YOU DIG

REGISTERED PROFESSIONAL ENGINEER L. CHEANG NO. GE 2345 EXP. 9-30-05 GEOTECHNICAL STATE OF CALIFORNIA

Earth Mechanics, Inc.
Geotechnical and Earthquake Engineering
17660 Newhope Street, Suite E
Fountain Valley, California 92708

REVIEWED BY: Lino Cheang
L. CHEANG RGE #2345
DATE: 2-26-04

MARK	REVISIONS	BY	APPR.	DATE

APPROVED _____ 2006
MICHAEL HUDSON, CITY OF MONTCLAIR
DEVELOPMENT SERVICES DEPARTMENT-PUBLIC WORKS/ENGINEERING
REGISTERED CIVIL ENGINEER NO. _____
MY LICENSE EXPIRES _____
DRAWN BY: S. SICILIANO
CHECKED BY: L. YAN
RECOMMENDED BY:

CITY OF MONTCLAIR
DEVELOPMENT SERVICES DEPARTMENT
MONTE VISTA AVENUE GRADE SEPARATION
LOG OF TEST BORINGS B-7, B-8, B-13

CITY FILE NO --------
DRAWING NO -----
SHEET 81 OF 82 SHEETS

Notes:

(1) 1.4-inch samples were taken using a SPT sampler with an inside diameter (I.D.) of 1.4" and an outside diameter (O.D.) of 2".

(2) 2.4-inch samples were taken using a California sampler with an inside diameter (I.D.) of 2.4" and an outside diameter (O.D.) of 3".

(3) Both samplers were driven using a 140-pound automatic trip hammer falling a distance of 30 inches.

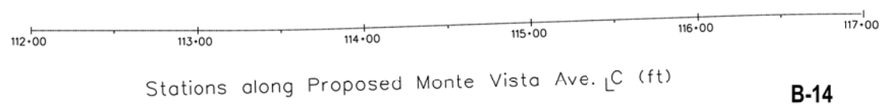

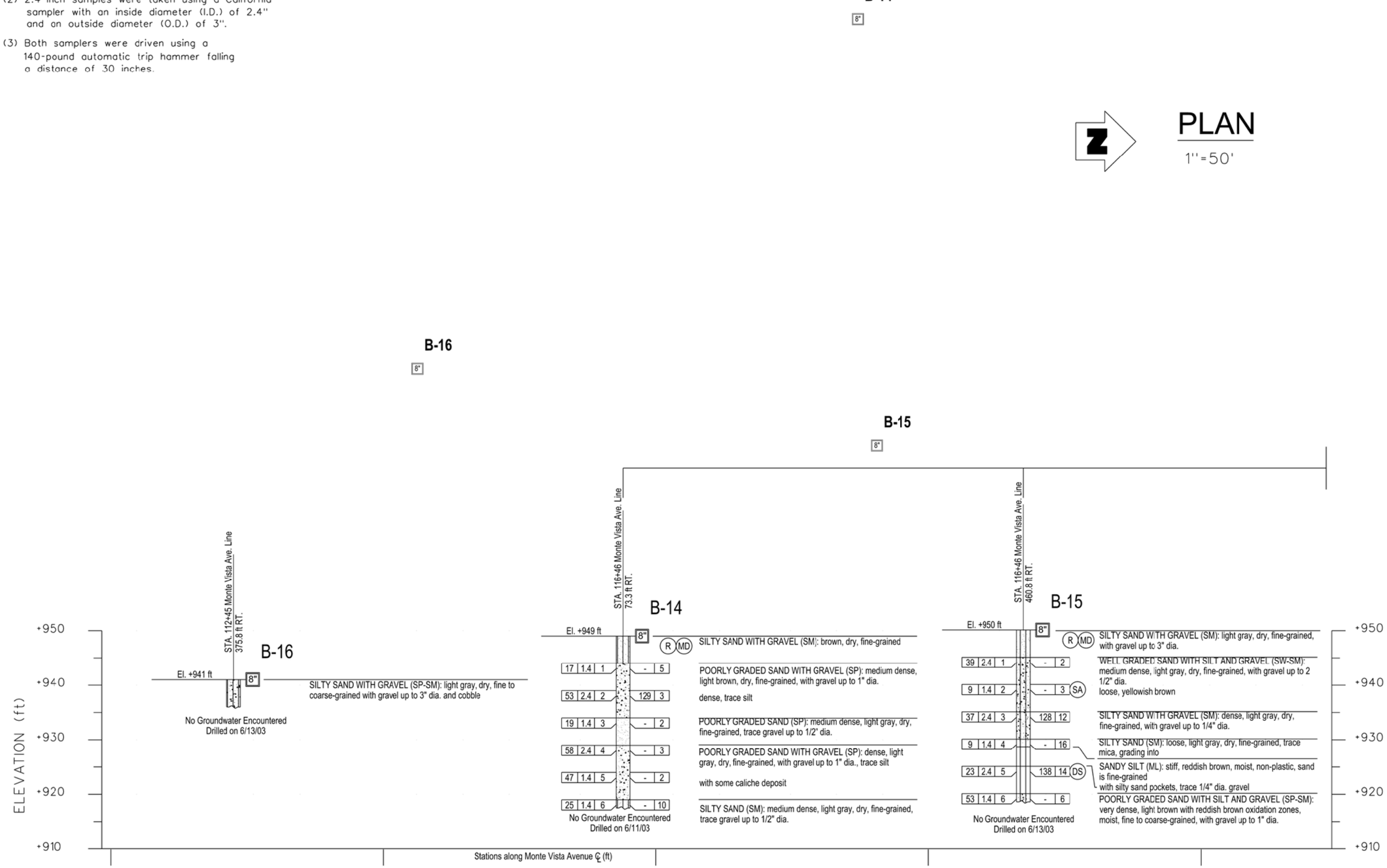

PROFILE

VERTICAL 1"=10'
HORIZONTAL 1"=20'

LEGEND OF BORING OPERATIONS

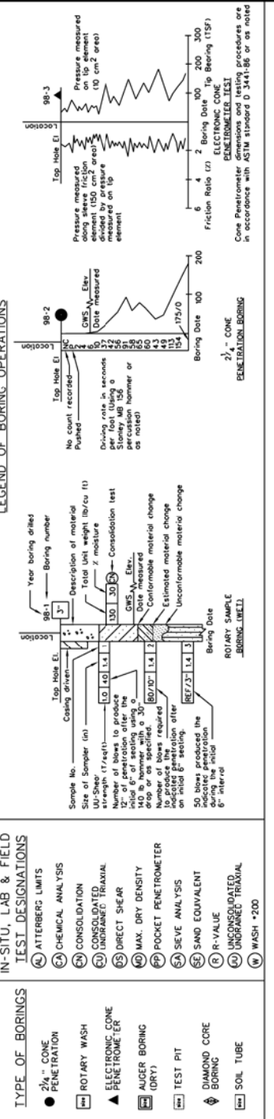

IN-SITU, LAB & FIELD TEST DESIGNATIONS

- (A) ATTERBERG LIMITS
- (C) CHEMICAL ANALYSIS
- (CN) CONSOLIDATION
- (CU) CONSOLIDATED UNDRAINED TRIAXIAL
- (DS) DIRECT SHEAR
- (D) MAX. DRY DENSITY
- (P) POCKET PENETROMETER
- (SA) SIEVE ANALYSIS
- (SE) SAND EQUIVALENT
- (R) R-VALUE
- (UU) UNCONSOLIDATED UNDRAINED TRIAXIAL
- (W) WASH #200

TYPE OF BORINGS

- 2¼" CONE PENETRATION
- ROTARY WASH
- ELECTRONIC CONE PENETROMETER
- AUGER BORING (DRY)
- TEST PIT
- DIAMOND CORE BORING
- SOIL TUBE

LEGEND OF EARTH MATERIALS (USCS) BASED ON ASTM D2487, D2488

- FILL MATERIAL
- CLAY (CL or CH)
- SILT (ML or MH)
- PEAT and/or ORGANIC MATTER
- POORLY GRADED SAND (SP)
- WELL GRADED SAND (SW)
- SILTY SAND (SM) or SANDY SILT
- CLAYEY SAND (SC) or SANDY CLAY
- COBBLES/BOULDERS
- CRACKED ROCK
- POORLY GRADED GRAVEL (GP)
- WELL GRADED GRAVEL (GW)
- SILTY GRAVEL (GM)
- CLAYEY GRAVEL (GC)
- SEDIMENTARY ROCK
- METAMORPHIC ROCK

CONSISTENCY CLASSIFICATION FOR SOILS

According to the Standard Penetration Test (ASTM D-1586)

SPT N-value (blows/ft)	Granular	SPT N-value (blows/ft)	Cohesive
0 - 4	Very Loose	< 2	Very Soft
5 - 10	Loose	2 - 4	Soft
11 - 30	Medium Dense	5 - 8	Firm
31 - 50	Dense	9 - 15	Stiff
> 50	Very Dense	16 - 30	Very Stiff
		> 31	Hard

Note: Visual classification of earth materials are based on field inspection and are confirmed or revised with laboratory test results as necessary.

Underground Service Alert
Call TOLL FREE 1-800 422-4133
TWO WORKING DAYS BEFORE YOU DIG

REGISTERED PROFESSIONAL ENGINEER
L. CHEANG
NO. GE 2345
EXP. 9-30-05
GEOTECHNICAL
STATE OF CALIFORNIA

Earth Mechanics, Inc.
Geotechnical and Earthquake Engineering
17660 Newhope Street, Suite E
Fountain Valley, California 92708

REVIEWED BY: Lino Cheang
L. CHEANG RGE #2345
DATE: 2-26-04

MARK	REVISIONS	BY	APPR.	DATE

APPROVED _____ 2006
MICHAEL HUDSON, CITY OF MONTCLAIR
DEVELOPMENT SERVICES DEPARTMENT-PUBLIC WORKS/ENGINEERING
REGISTERED CIVIL ENGINEER NO.
MY LICENSE EXPIRES
DRAWN BY: S. SICILIANO
CHECKED BY: L. YAN
RECOMMENDED BY:

CITY OF MONTCLAIR
DEVELOPMENT SERVICES DEPARTMENT
MONTE VISTA AVENUE
GRADE SEPARATION

LOG OF TEST BORINGS B-14, B-15, B-16

CITY FILE NO -------
DRAWING NO -----
SHEET 82 OF 82 SHEETS