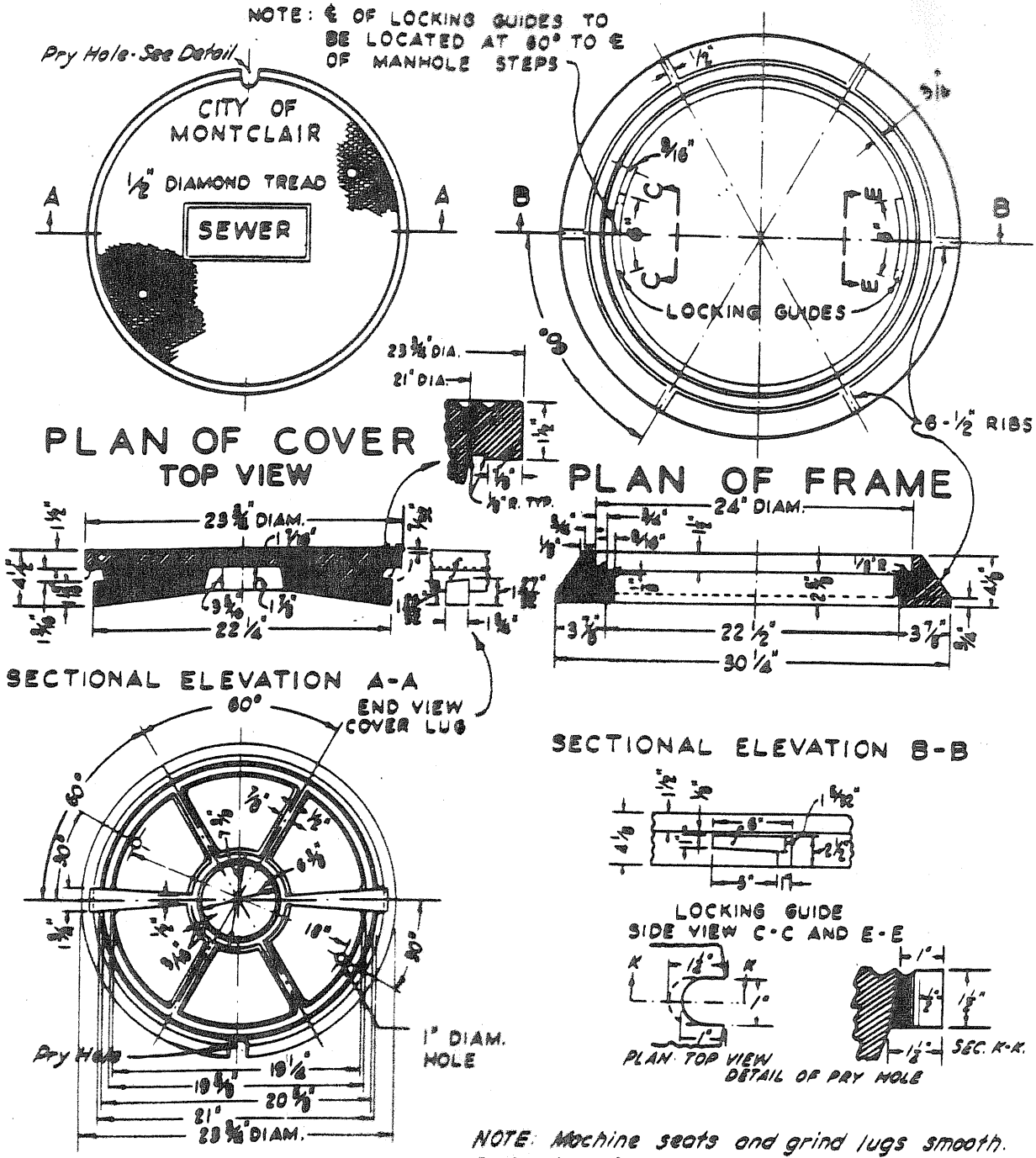

NOTE: Machine seats and grind lugs smooth.
Perimeter of cover shall be ground smooth,
Diameter tolerance ± 1/16"
Weight of Manhole Frame - 150 lbs.
Weight of Manhole Cover - 215 lbs.
The Cast Iron used shall have a tensile strength of 30,000 lbs. per sq. in.
Alhambra Foundry No. A 1175 or Apex # X-107

CITY OF MONTCLAIR			
MANHOLE FRAME & COVER			
DRAWN BY	CHECKED BY	APPROVED BY	DATE
Rogers	D.G.	Carl L. Santell CITY ENGINEER R.C.E. 20717	8-31-87

STD. NO. 310

SECTIONAL ELEVATION B-B

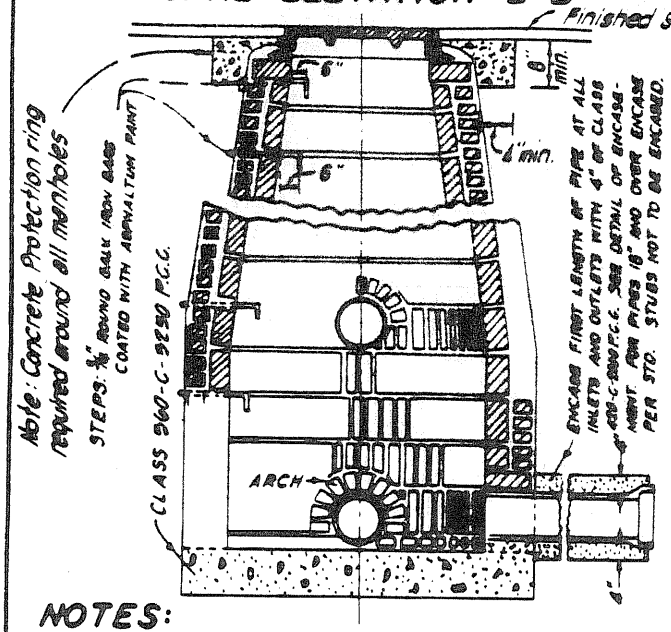

SECTIONAL ELEVATION A-A

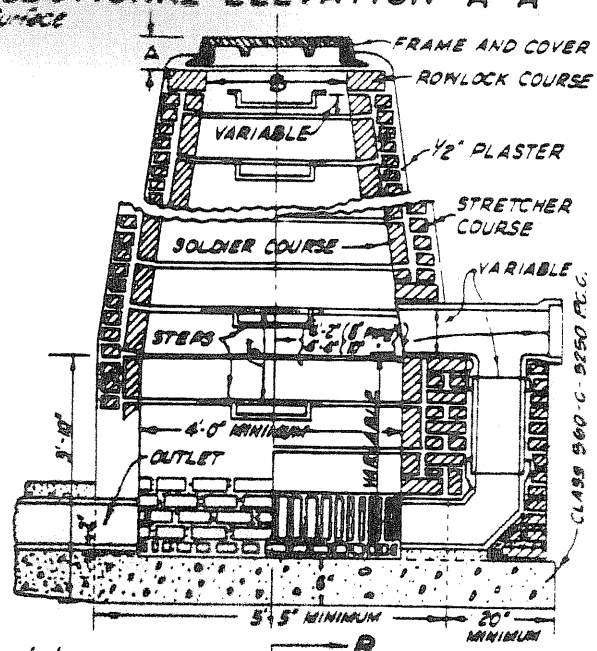

NOTES:

1. CONCRETE BASE: During construction, all pipes shall be rigidly supported by brick piers one foot deep, located just outside the structure. Construct top of concrete base two inches below invert of lowest pipe. Fill space beneath pipe with mortar and shove from both sides with base course brick to form a water tight joint.
2. BASE OR FAN COURSE: Lay brick flat on radial lines with tops to same level.
3. ARCHES: Lay spalled brick on edge to form a true radial arch with full mortar joint around all pipe openings. Turn arch of two such courses over pipes 15" or more in diameter.
4. SOLDIER COURSES: Lay inside brick on radial lines with first four courses vertical. Lay succeeding courses with a uniform batter to obtain an inside diameter of "B" at top of last or fractional soldier course. Use split brick to close soldier courses.
5. STRETCHER COURSES: Lay outside brick flat in a deep bed of mortar. Shove brick hard together against adjacent soldier course.
6. ROWLOCK COURSE: Lay last course of brick on edge across soldier and stretcher courses, on radial lines, with tops parallel and "A" inches below finished grade. See Schedule.
7. STEPS: Set lower step on top of third soldier course and notch brick above. Place upper step immediately below rowlock course and project three inches. If upper invert of Drop manhole is more than four feet above shelf. Set one step on each side of structure at right angles to and not more than four feet below the above inlet.
8. JOINTS: Inside joints shall be neatly struck and pointed and shall not exceed ⅜ inch in thickness.
9. CHANNEL BASE: The depth of channel in channel base shall be ⅔ of pipe diameter for pipes 15" or less, and shall equal the pipe diameter for pipes 18" or larger. For special channels in trap or gouging manholes see special plans.
10. PRECAST CONC. MANHOLES: Use class 560-C-3250 P.C.C. encasement around drop inlet pipe instead of brickwork for all precast conc drop manholes.

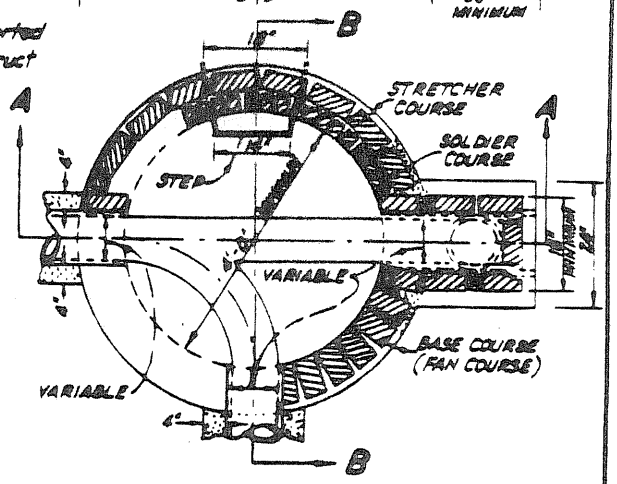

SECTIONAL PLAN OF BASE

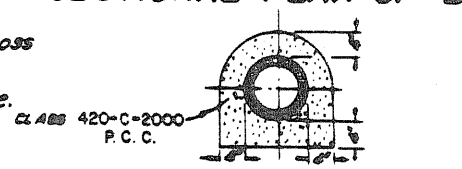

CROSS SECTION OF ENCASEMENT

SECTIONAL ELEVATION B-B CHANNEL BASE

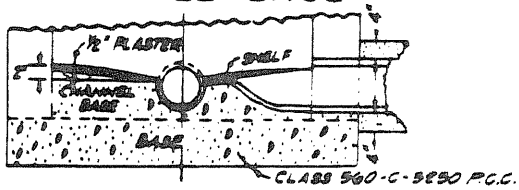

CITY OF MONTCLAIR

STANDARD PLAN
DROP MANHOLE

DRAWN BY	CKD. BY	APPROVED BY	DATE
GER	D.G.	Carl L. Lantell, CITY ENGINEER R.C.E. 20717	8-31-87

STD. NO. 211

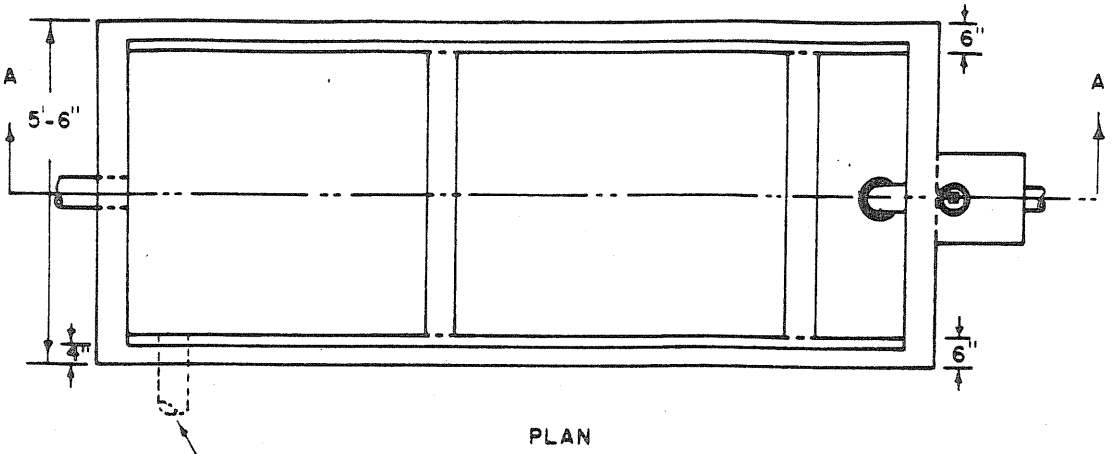

PLAN

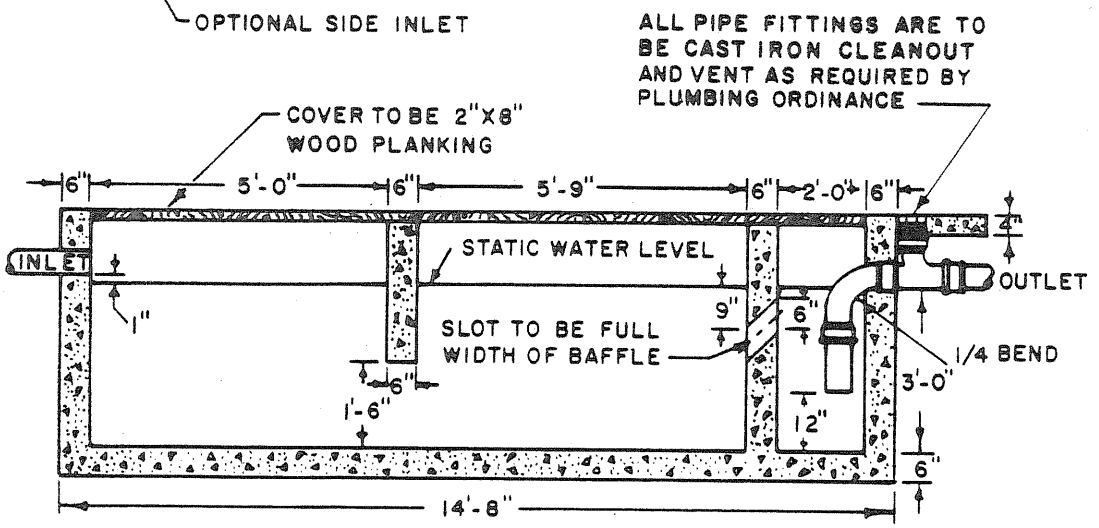

SECTION A-A

NOTES:

THE APPROVAL OF THE CITY ENGINEER MUST BE OBTAINED BEFORE INSTALLATION.
THE INTERCEPTOR IS TO BE CONSTRUCTED OF CLASS B PORTLAND CEMENT CONCRETE.
INTERCEPTORS EXCEEDING 6'-6" IN DEPTH MUST BE CONSTRUCTED OF REINFORCED CONCRETE.
IF INSTALLED INSIDE OF BUILDING THE TOP OF INTERCEPTOR MAY BE LEVEL WITH FLOOR PROVIDED THAT WASTES ENTER THROUGH THE INLET PIPE ONLY.
ALL SURFACE WATER MUST DRAIN AWAY FROM THE INTERCEPTOR TO EXCLUDE RAIN WATER FROM THE PUBLIC SEWERS.

CITY OF MONTCLAIR			
SAND INTERCEPTER			
DWG. BY	CKD. BY	APPROVED BY	Date
M.A.	D.G.	Earl L. Sentell CITY ENG. R.C.E 20717	8-31-87

STD. NO. 212

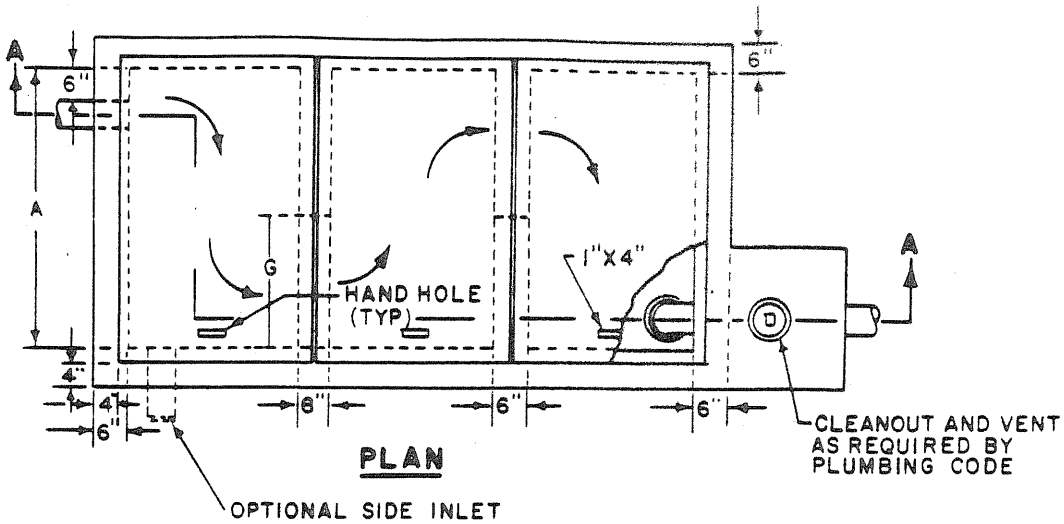

PLAN

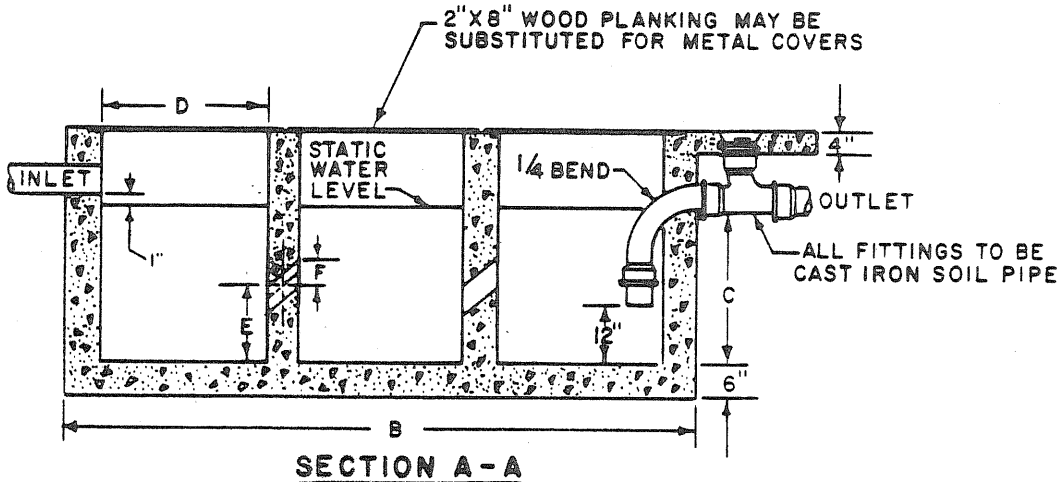

SECTION A-A

NOTES:

THE APPROVAL OF THE CITY ENGINEER MUST BE OBTAINED BEFORE INSTALLATION.
THE INTERCEPTOR IS TO BE CONSTRUCTED OF CLASS B PORTLAND CEMENT CONCRETE.
INTERCEPTORS EXCEEDING 6'-6" IN DEPTH MUST BE CONSTRUCTED OF REINFORCED CONCRETE.
IF INSTALLED INSIDE OF BUILDING THE TOP OF INTERCEPTOR MAY BE LEVEL WITH FLOOR PROVIDED THAT WASTES ENTER THROUGH THE INLET PIPE ONLY.
ALL SURFACE WATER MUST DRAIN AWAY FROM THE INTERCEPTOR TO EXCLUDE RAIN WATER FROM THE PUBLIC SEWERS.

CAPACITY GALLONS	DEMENSIONS							COVER SIZE	METAL COVERS	PIPE SIZE
	A	B	C	D	E	F	G			
338	3'-0"	9'-6"	2'-0"	2'-6"	1'-0"	0'-3"	1'-6"	2'-10"x 3'-4"	1/4" STEEL PLATE	4"
510	3'-0"	9'-6"	3'-0"	2'-6"	1'-6"	0'-4 1/2"	1'-6"	2'-10"x 3'-4"	1/4" STEEL PLATE	6"
866	3'-6"	10'-3"	4'-0"	2'-9"	2'-0"	0'-6"	1'-9"	3'-1"x 3'-10"	3/8" ALUMINUM PLATE	6"
1260	4'-0"	12'-6"	4'-0"	3'-6"	2'-0"	0'-6"	2'-0"	3'-10"x 4'-4"	3/8" ALUMINUM PLATE	6"

CITY OF MONTCLAIR

SAND & GREASE INTERCEPTER

DWG BY	CKD BY	APPROVED BY	Date
M.A	D.G.	Earl L. Sawtell CITY ENG. R.C.E. 20717	8-31-87

STD. NO. 213

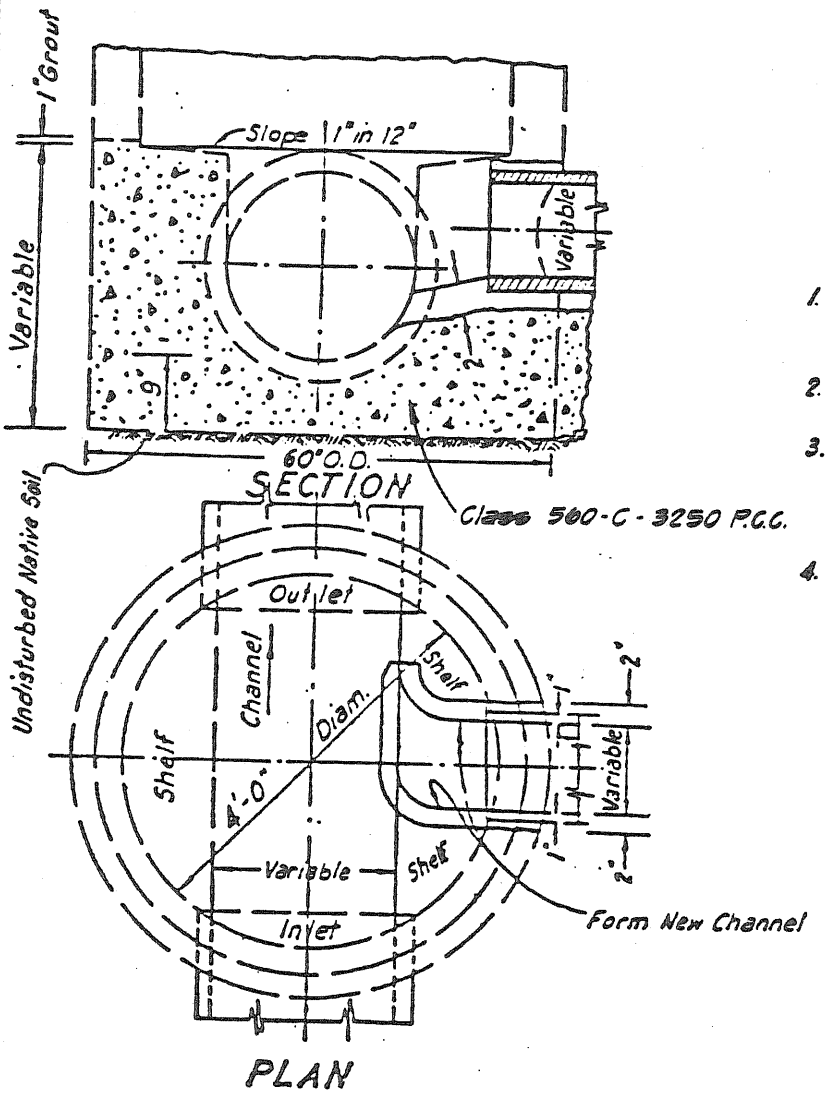

NOTES:

1. Break through existing manhole wall and open circular hole to provide 1" clear around pipe inlet to be installed.
2. Break out channel to 2" below proposed flowline.
3. Paint existing exposed concrete surfaces with epoxy resin bond as recommended by the manufacturer and to satisfaction of the City Engineer.
4. Seal pipe stub and form new channel with concrete mortar and epoxy resin mixed as directed by the City Engineer.

CITY OF MONTCLAIR			
BREAK INTO AND RECHANNEL EXISTING MANHOLE			
DWN. BY	CKD BY	APPROVED	DATE
G.E.R.	E.S.F.	CITY ENGINEER	8-31-82

STD. NO. 214

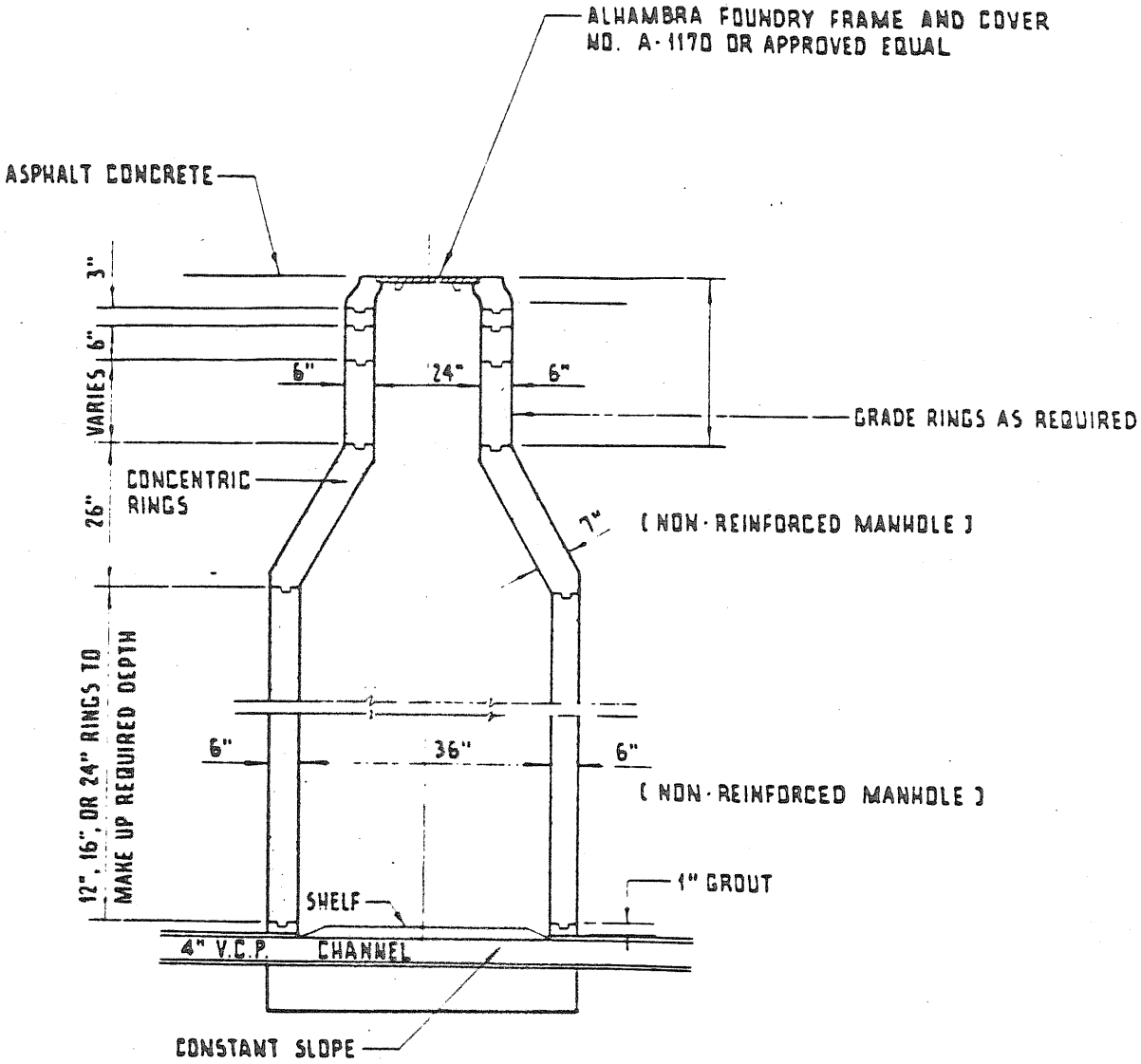

NOTES:

1. REINFORCED PRE-CAST MANHOLES SHALL BEAR ASTM C-478 SPECIFICATIONS.
2. NON-REINFORCED PRE-CAST MANHOLES SHALL BE CLASS 560C-3250 PER SECTION 201 SS PWC.
3. THE DEPTH OF THE CHANNEL SHALL BE THE FULL DIAMETER OF THE PIPE.

CITY OF MONTCLAIR			
INSPECTION AND METERING MANHOLE			
DWN. BY D.G.	CKD. BY	APPROVED BY CITY ENGR. R.C.E. 20717	DATE 8/31/87

STD. NO. 215