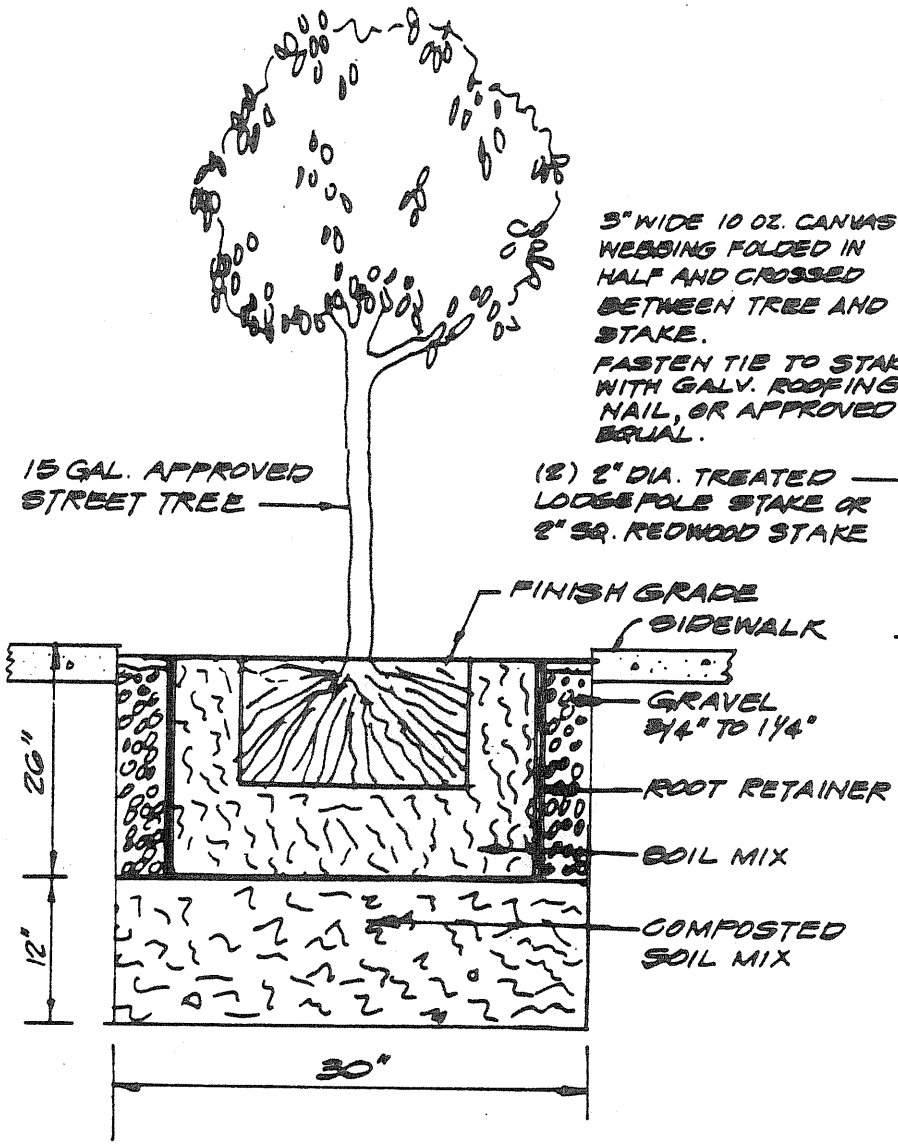


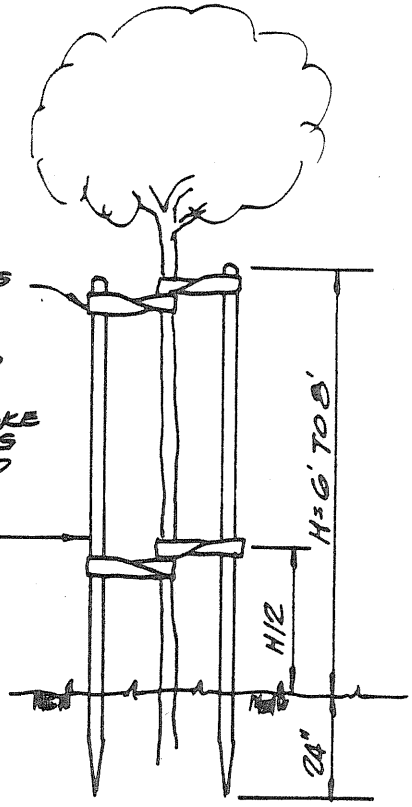


TREE STAKING DETAIL

NOTE

ALL NEW STREET TREES SHALL BE PLANTED TO THE MAXIMUM WIDTH OF THE RIGHT-OF-WAY AND THE LOCATION SHALL BE APPROVED BY THE CITY ENGINEER.

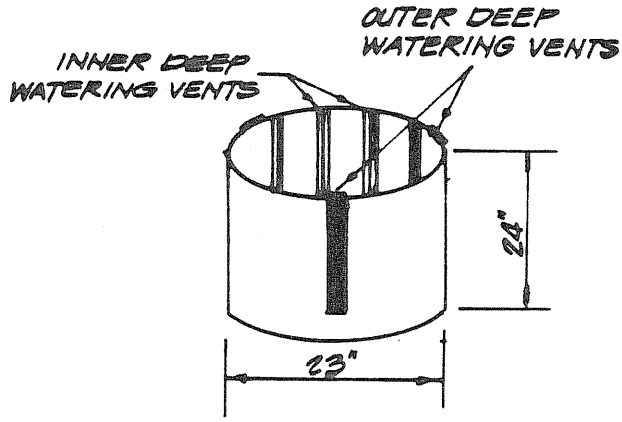


ROOT RETAINER

| CITY OF MONTCLAIR | | | |
|---|---|---|---|
| STANDARD TREE WELL WITH TREE | | | |
| DWN. BY HK | CKD. BY DG | APPROVED BY CITY ENGR. R.C.E. 20717 | DATE 4/[illegible] |

STD. NO. 130

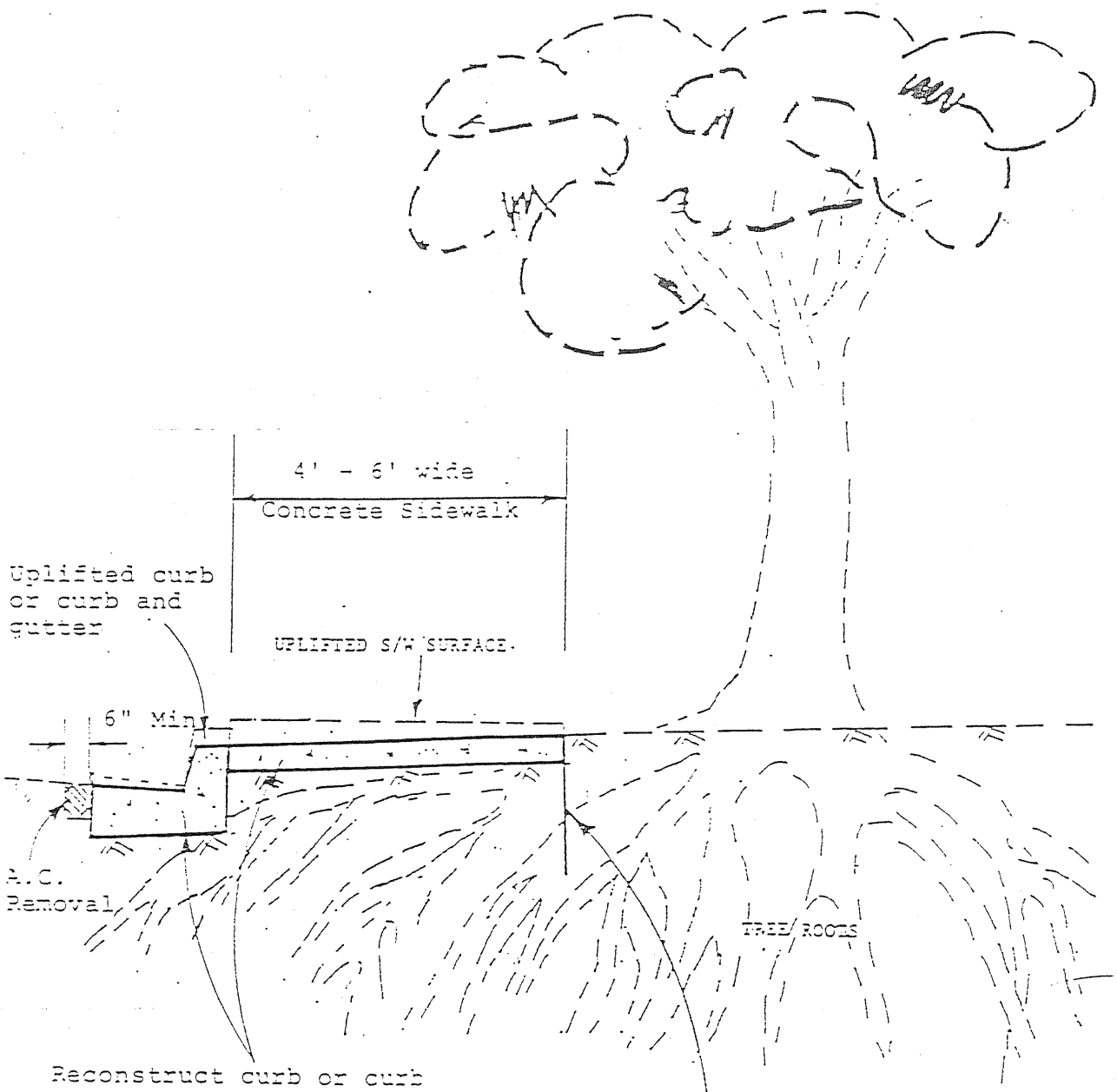


CITY OF MONTCLAIR

**ROOT BARRIER**

Tree Located Behind Sidewalk

| DWN. BY | CKD. BY | APPROVED BY | DATE |
|---|---|---|---|
| DG | | CITY ENGR. R.C.E. 20717 | 1/4/09 |

STD NO. 131

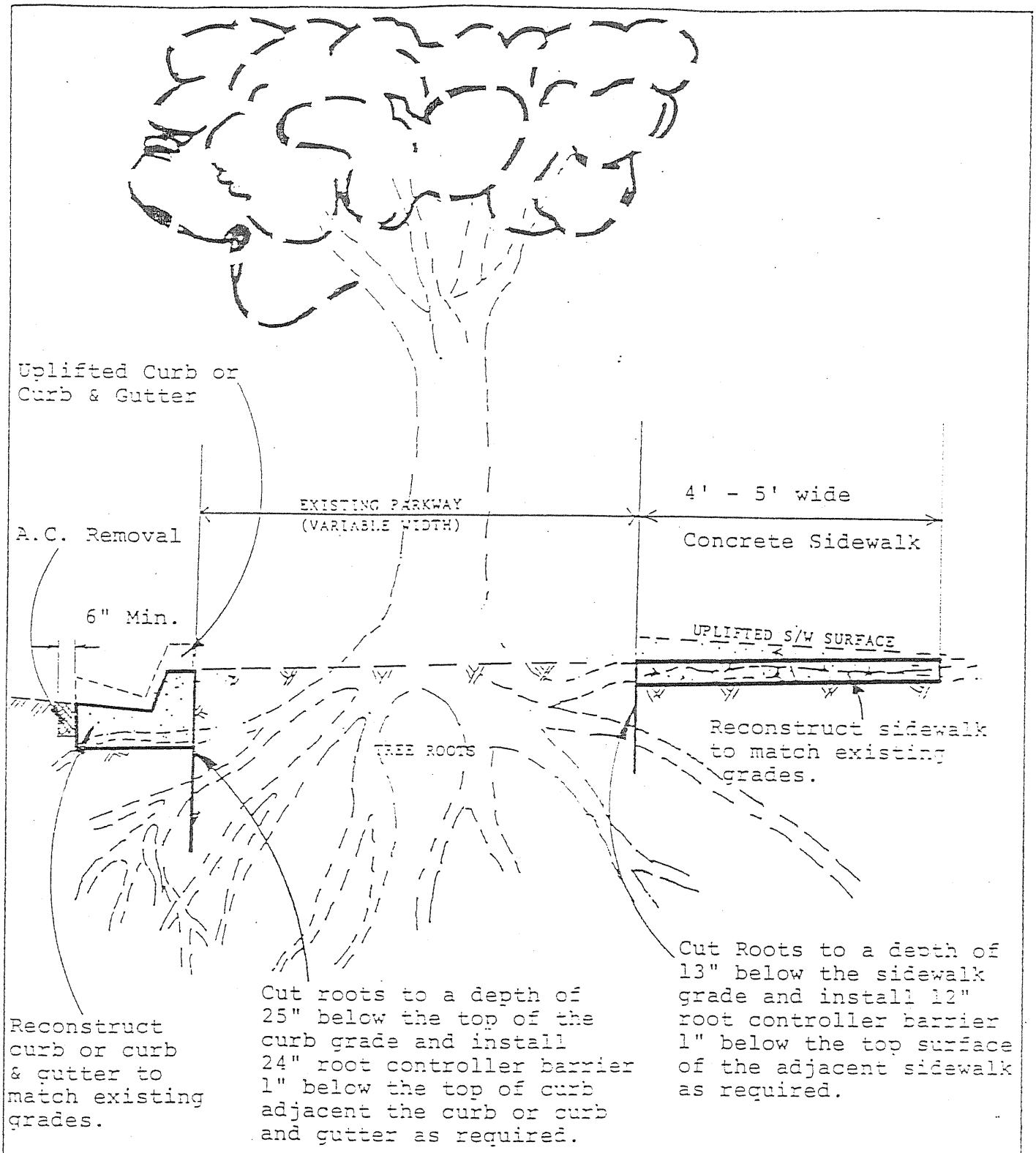


CITY OF MONTCLAIR

**ROOT BARRIER**

Tree Located in Parkway

| DWN. BY | CKD. BY | APPROVED BY | DATE |
|---|---|---|---|
| | | CITY ENGR. R.C.E. 20717 | |

STD. NO. 132

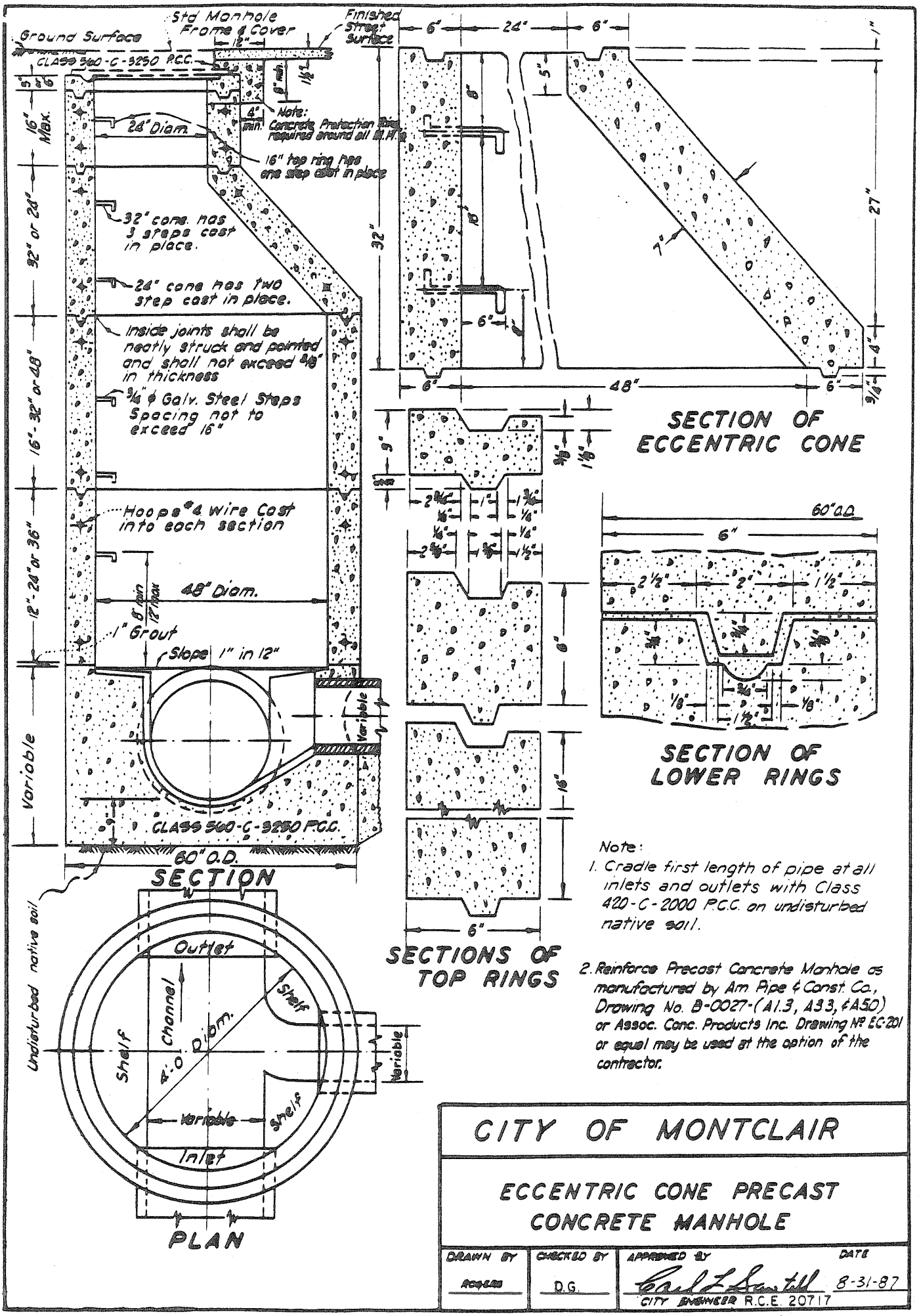


Note:

1. Cradle first length of pipe at all inlets and outlets with Class 420-C-2000 P.C.C. on undisturbed native soil.

2. Reinforce Precast Concrete Manhole as manufactured by Am. Pipe & Const. Co., Drawing No. B-0027-(A1.3, A3.3, & A5.0) or Assoc. Conc. Products Inc. Drawing No. EC-201 or equal may be used at the option of the contractor.

# CITY OF MONTCLAIR

## ECCENTRIC CONE PRECAST CONCRETE MANHOLE

| DRAWN BY | CHECKED BY | APPROVED BY | DATE |
|---|---|---|---|
| ROGERS | D.G. | Carl L. Santell<br>CITY ENGINEER R.C.E. 20717 | 8-31-87 |

STD. NO. 202

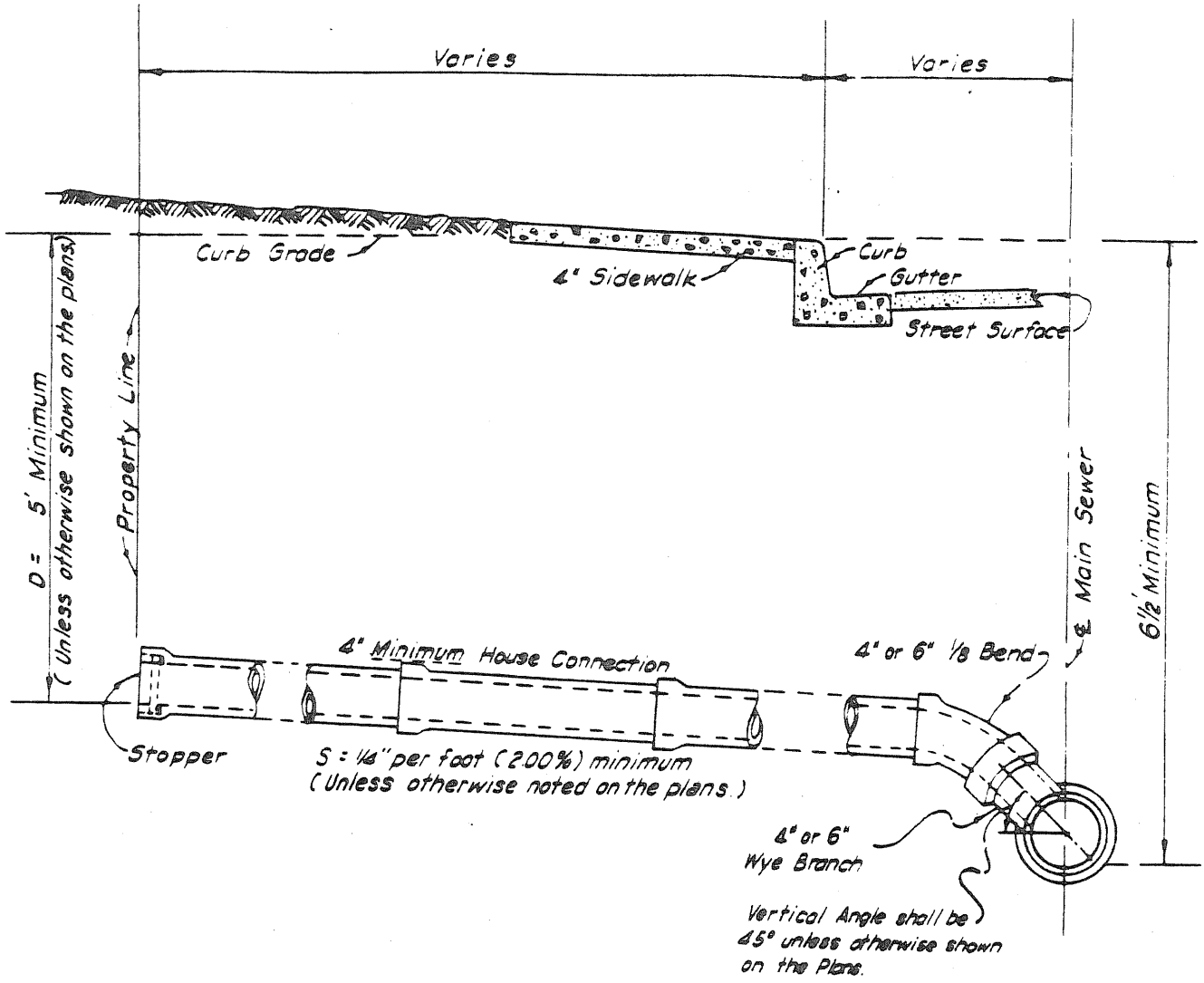


| CITY OF MONTCLAIR | | | |
|---|---|---|---|
| RESIDENTIAL LATERAL | | | |
| DRAWN BY GER | CHECKED BY D.G. | APPROVED BY CITY ENGINEER R.C.E. 20717 | DATE 8-31-87 |

STD. NO. 204

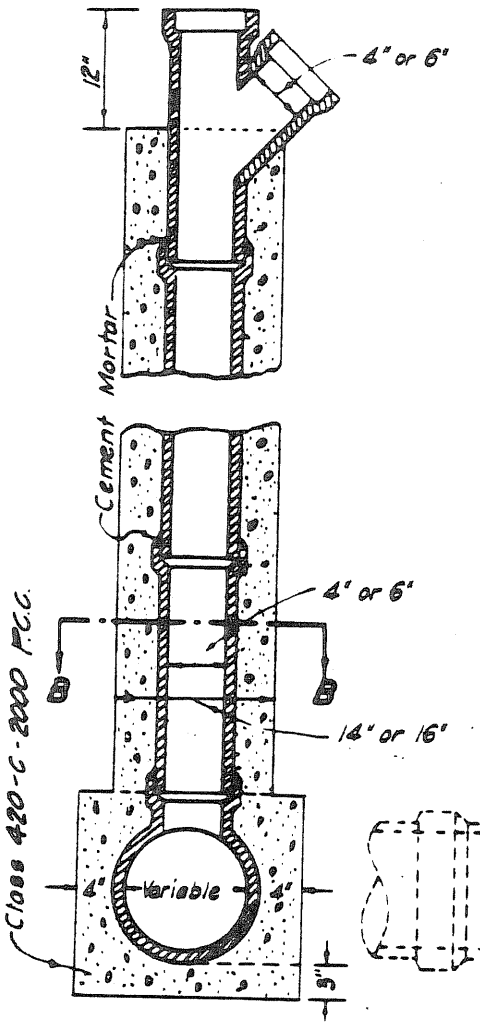


SECTION A-A

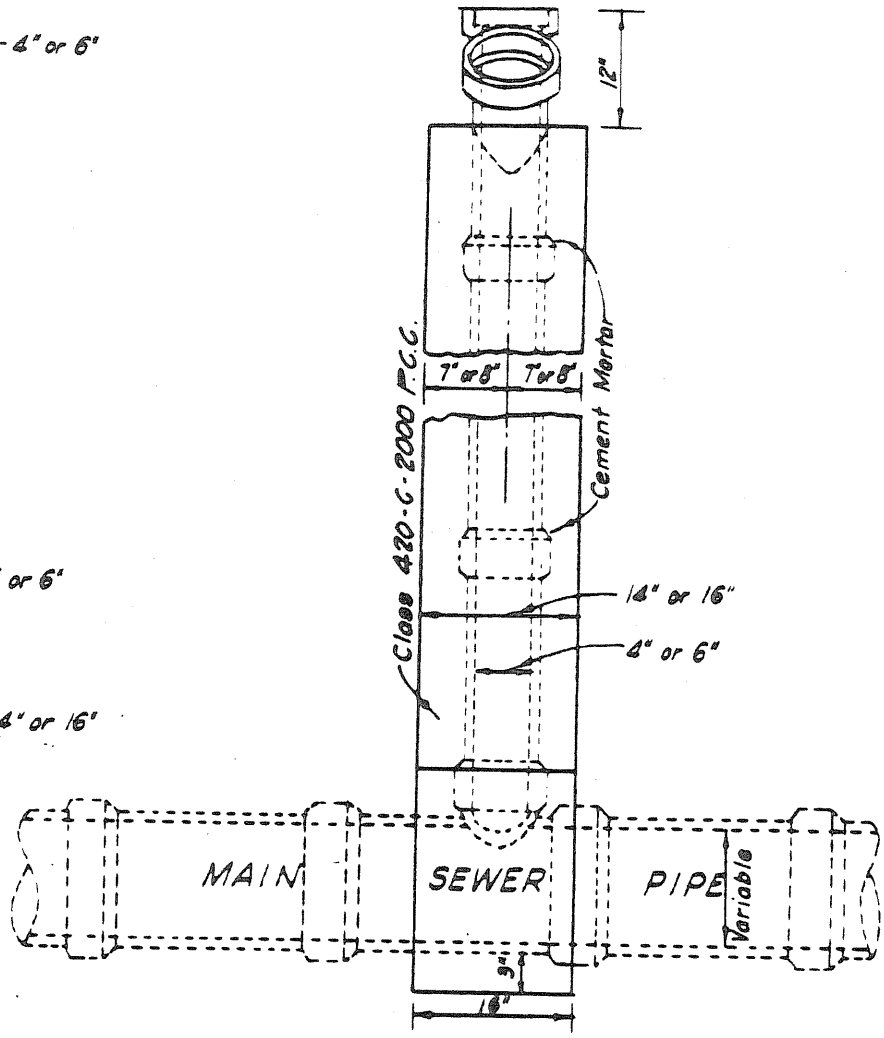


ELEVATION

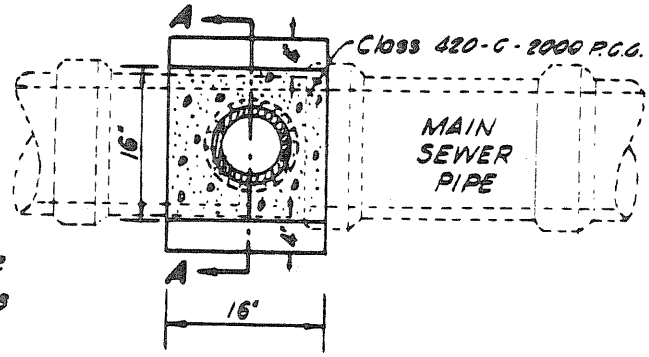


SECTIONAL PLAN B-B

Notes:

1. The upper end of the Chimney Pipe shall be 8 feet below the grade of the lower curb, unless otherwise specified.
2. Where One or Two House Connections are to be joined to the Chimney Pipe, use a single "Y" branch, where three House Connections are to be joined, use a double "Y" branch.
3. Where the Chimney Pipe is to be used for a single House Connection face "Y" toward property to be served; where used for House Connections on both sides of the sewer, the House Connection on the right side of the sewer, (looking up grade) shall be connected to the "Y" branch by a 1/8 bend and the House Connection on the left side shall be connected to the upper end of the Chimney by a 4" or 6" 1/4 bend unless otherwise specified.

| CITY OF MONTCLAIR | | |
|---|---|---|
| STANDARD CHIMNEY PIPE | | |
| DRAWN BY GER. | CHECKED BY D.G. | DATE 8-31-87 |
| CITY ENGINEER R.C.E. 20717 | | |

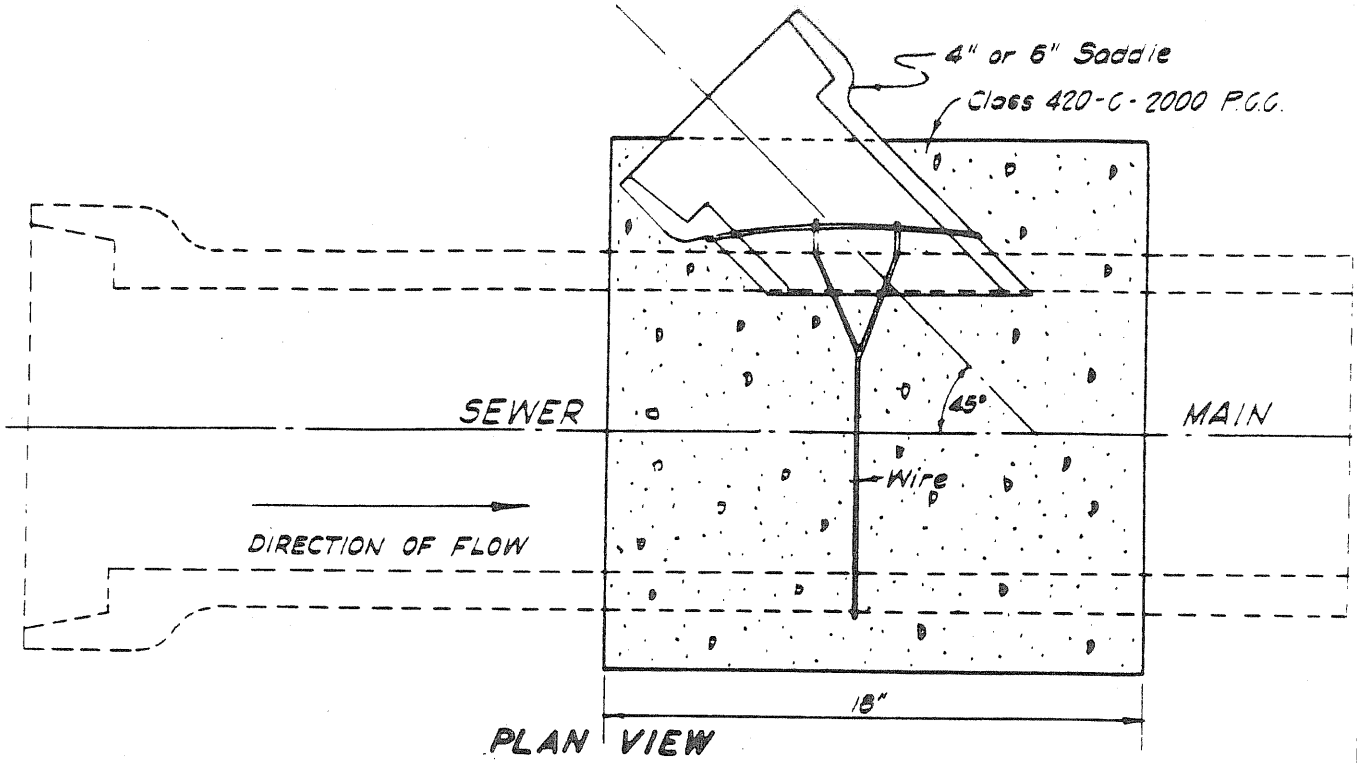


PLAN VIEW

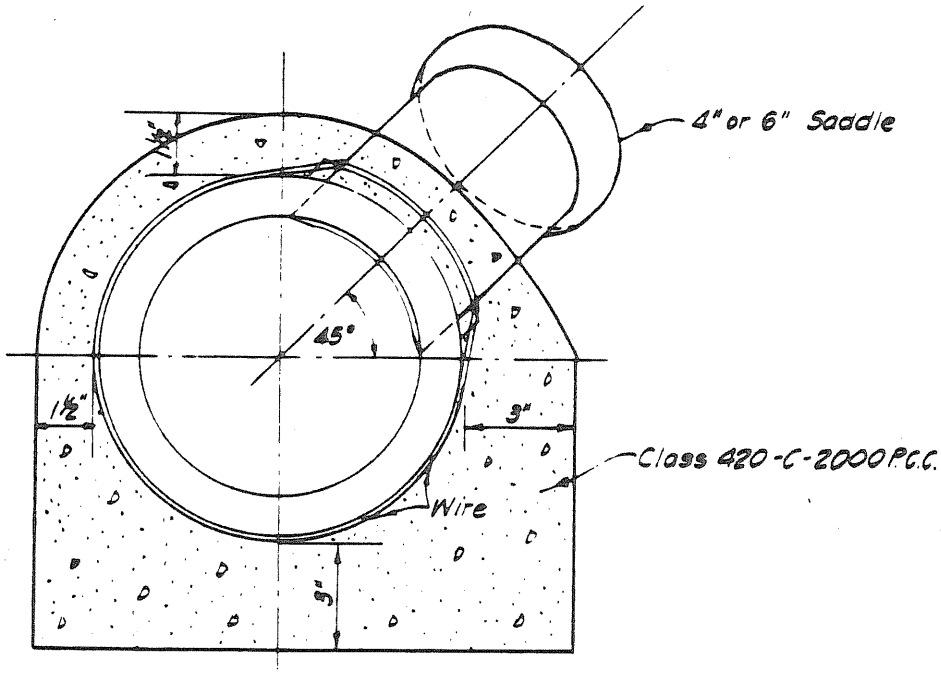


SECTION

Notes

1. Inspection must be obtained for Saddle prior to placing P.C.C. and again before backfilling over Lateral.
2. Tie wire shall be 12 ga. galvanized wire.

| CITY OF MONTCLAIR | | | |
|---|---|---|---|
| SEWER SADDLE | | | |
| DRAWN BY | CHECKED BY | APPROVED BY | DATE |
| GER | D.G. | [signature] CITY ENGINEER R.C.E. 20717 | 8-31-87 |

STD. NO. 206

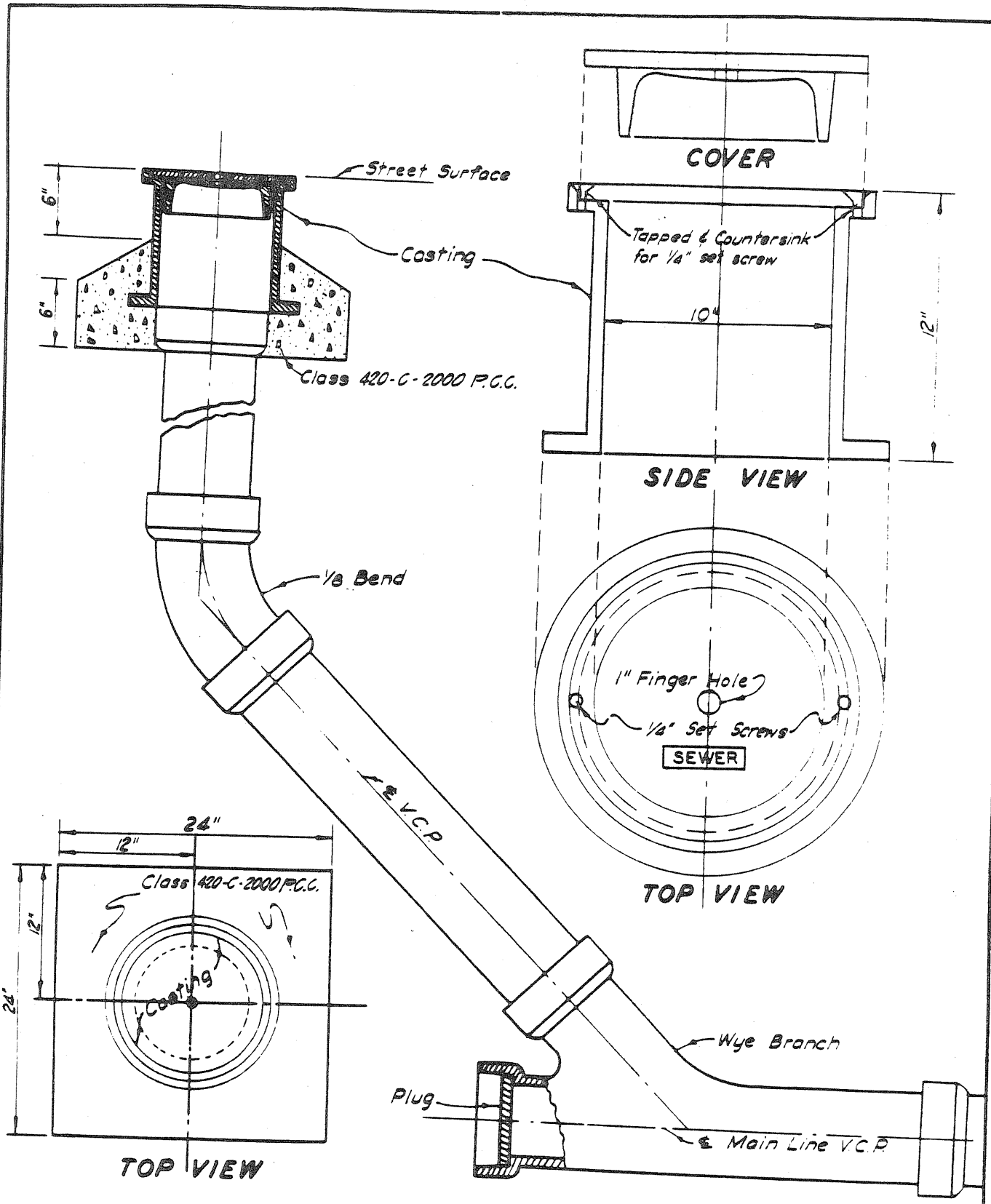


Notes:

1. Clean-out pipe must be same diameter as main line sewer.
2. Casting may be Alhambra Foundry Number A-1240 or equal.

| CITY OF MONTCLAIR | | | |
|---|---|---|---|
| SEWER TERMINAL CLEAN-OUT | | | |
| DRAWN BY GER | CHECKED BY D.G. | APPROVED BY [signature] CITY ENGINEER R.C.E. 20717 | DATE 8-31-87 |

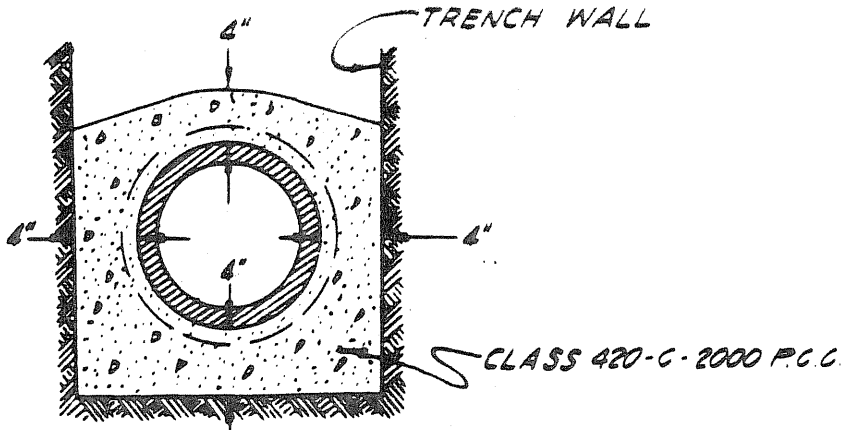


NO. 1
CONCRETE ENCASEMENT

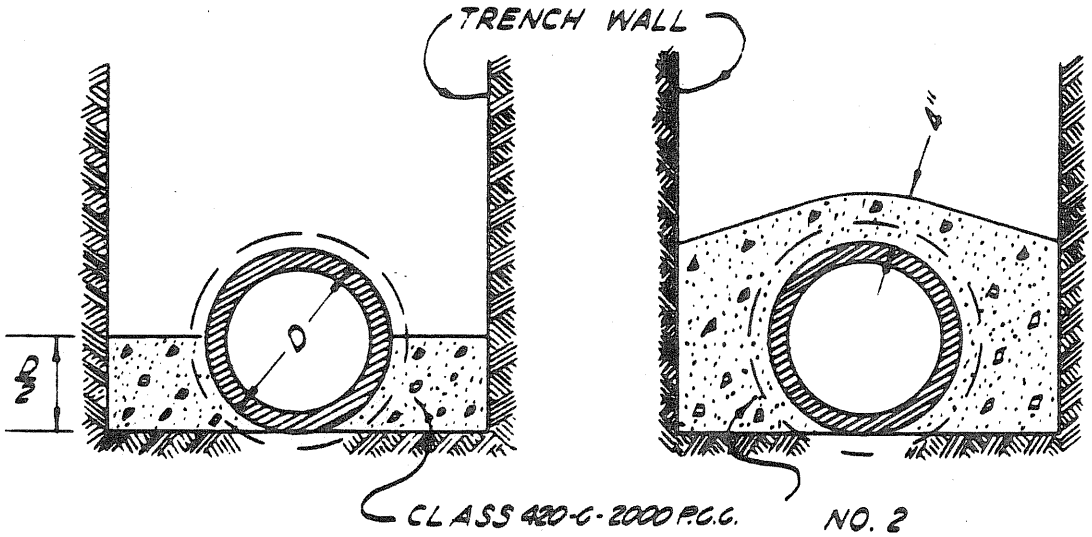


CONCRETE CRADLE

NO. 2
CONCRETE ENCASEMENT

NOTE:
Where trench width exceeds the width specified in the specifications, Contractor shall furnish and place at his own expense, a cradle as shown above.

| CITY OF MONTCLAIR | | | |
|---|---|---|---|
| CONCRETE CRADLE & ENCASEMENT | | | |
| DRAWN BY | CHECKED BY | APPROVED BY | DATE |
| ROGERS | D.G. | [signature] CITY ENGINEER R.C.E. 20717 | 8-31-87 |

STD NO. 208